| NON-CONTROLLED COPY | COPY ISSUED BY_____. |
|---|---|
| INFORMATION SUBJECT TO CHANGE WITHOUT NOTICE | |
| COPY WILL NOT BE UPDATED | COPY ISSUED ON_____. |

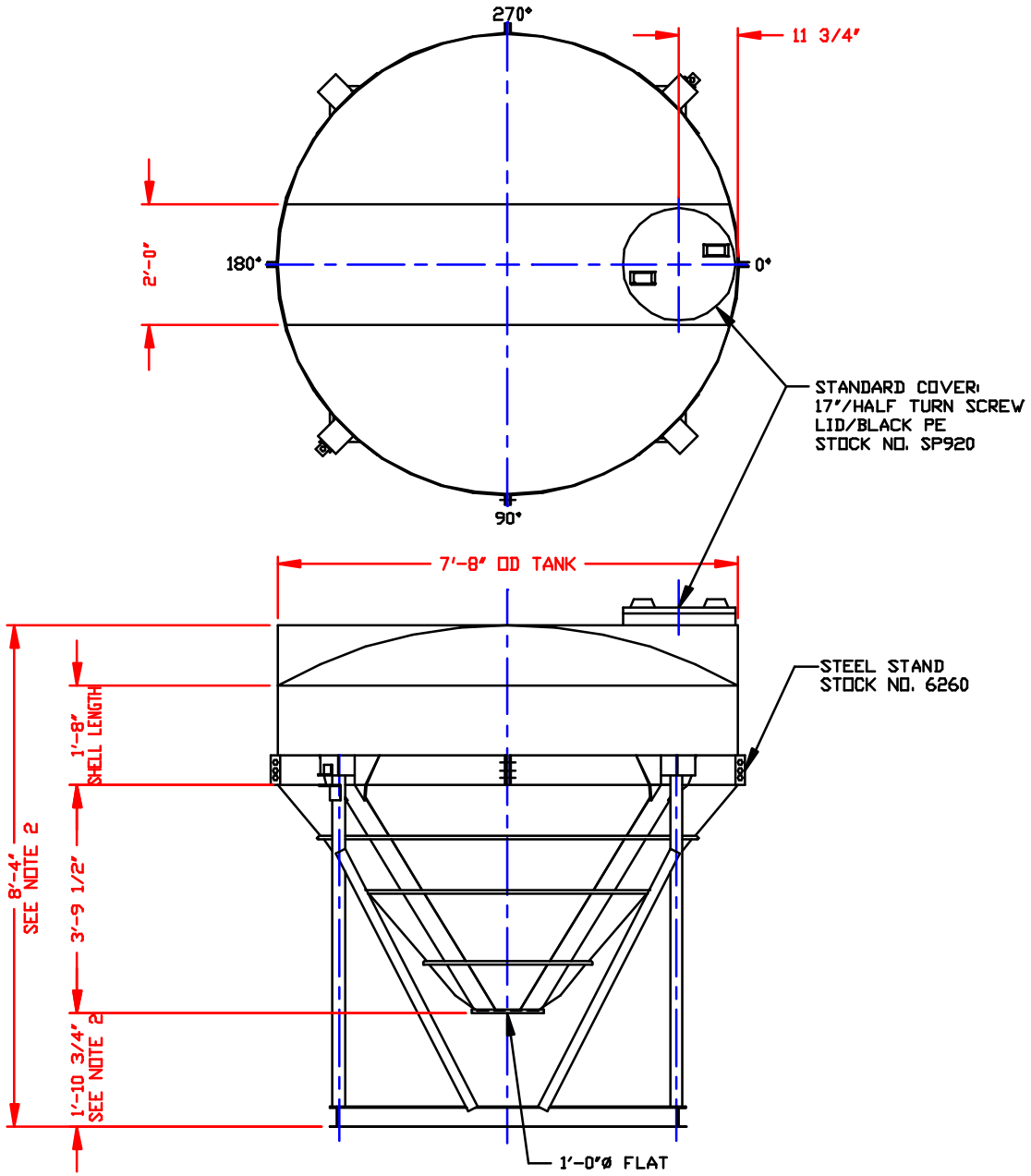


NOZZLE SCHEDULE & ACCESSORIES

| SERVICE | MK | STOCK NO. | SIZE | FITTING | DEG | ELEV |
|---|---|---|---|---|---|---|
| | | | | | | |
| | | | | | | |
| | | | | | | |
| | | | | | | |
| | | | | | | |
| | | | | | | |
| | | | | | | |
| | | | | | | |
| | | | | | | |
| | | | | | | |

NOTES
1. THIS IS A COMPUTER GENERATED DWG. DO NOT REVISE BY HAND.
2. DIMENSIONS WILL VARY ±3% DUE TO VARIATIONS IN MULTIPLE MOLDS & CONDITIONS PREVALENT DURING MANUFACTURE & USAGE. WHEN FILLED, TANK MAY SETTLE IN STAND CAUSING VARIATIONS IN BOTTOM CLEARANCE & OVERALL HEIGHT DIMENSIONS.
3. NO MOLDED IN GALLONAGE MARKERS THIS TANK.

CALCULATED CAPACITIES/ VOLUME IN U.S. GALLONS

| DESIGN CAP | DOME VOL | TOTAL VOL |
|---|---|---|
| 1058 | 209 | 1267 |

CONFIDENTIAL PROPERTY OF POLY PROCESSING COMPANY NOT FOR REPRINT OR USE WITHOUT PERMISSION

DWG TITLE: 1050 GALLON 50° CONE BOTTOM TANK W/STEEL STAND

SCALE: 1/2"=1'-0"

DATE: 5/8/00

POLY PROCESSING Company

DR: MB WILKERSON

CK: D. RECTOR

| SHEET | COMPUTER FILE | REV |
|---|---|---|
| 1 OF 1 | 14001050S | - |