NON-CONTROLLED COPY

INFORMATION SUBJECT TO CHANGE WITHOUT NOTICE

VERIFY REV LEVEL OF PAPER COPY WITH REV LEVEL ON PPC WEB SITE

NOZZLE SCHEDULE & ACCESSORIES						
SERVICE	MK	STOCK NO.	SIZE	FITTING	DEG	ELEV

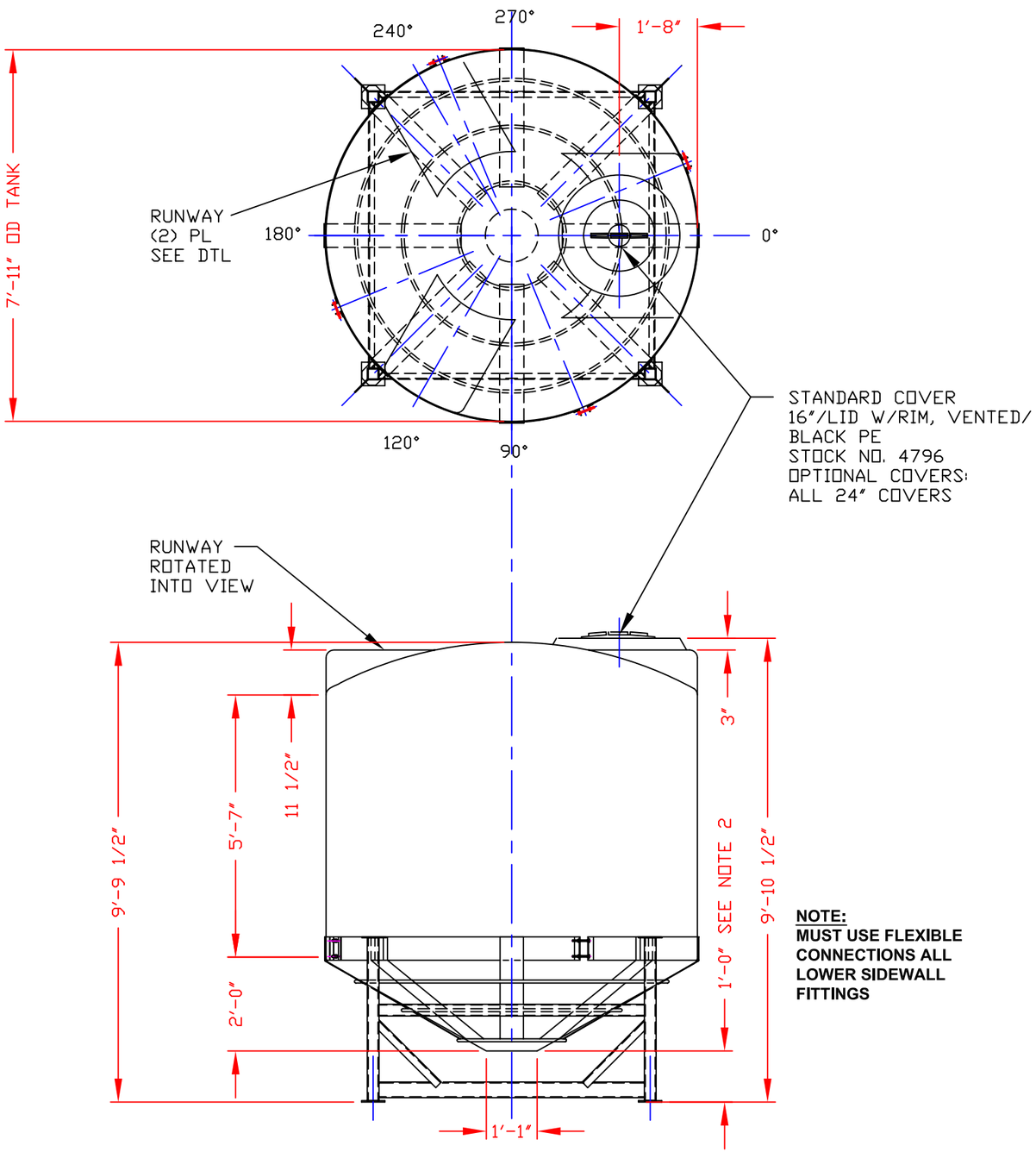

NOTE:
MUST USE FLEXIBLE CONNECTIONS ALL LOWER SIDEWALL FITTINGS

NOTES
1. THIS IS A COMPUTER GENERATED DWG. DO NOT REVISE BY HAND.
2. DIMENSIONS WILL VARY ±3% DUE TO VARIATIONS IN MULTIPLE MOLDS & CONDITIONS PREVALENT DURING MANUFACTURE & USAGE. WHEN FILLED, TANK MAY SETTLE IN STAND CAUSING VARIATIONS IN BOTTOM CLEARANCE & OVERALL HEIGHT DIMENSIONS.
3. MOLDED IN GALLONAGE MARKERS IN MANWAY AREA IN 100 GALLON INCREMENTS UP TO 2300 GALLONS.

CALCULATED CAPACITIES/ VOLUME IN U.S. GALLONS		
DESIGN CAP	DOME VOL	TOTAL VOL
2300	198	2498

CONFIDENTIAL PROPERTY OF POLY PROCESSING COMPANY NOT FOR REPRINT OR USE WITHOUT PERMISSION

DWG TITLE
2300 GAL 30° CONE BOTTOM TANK W/STAND

SCALE: 3/8"=1'-0"

DATE: 1/31/2008

POLYPROCESSING COMPANY
Western Region
P.O. Box 80
8055 South Ash Street
French Camp, CA 95231
(209) 982-4904
FAX (209) 982-0455

DR: B. DUMAS

CK: W. MANUEL

SHEET	COMPUTER FILE	REV
1 OF 1	14002300S	-

B-375