NON-CONTROLLED COPY

INFORMATION SUBJECT TO CHANGE WITHOUT NOTICE

VERIFY REV LEVEL OF PAPER COPY WITH REV LEVEL ON PPC WEB SITE

NOZZLE SCHEDULE & ACCESSORIES

SERVICE	MK	STOCK NO.	SIZE	FITTING	DEG	ELEV

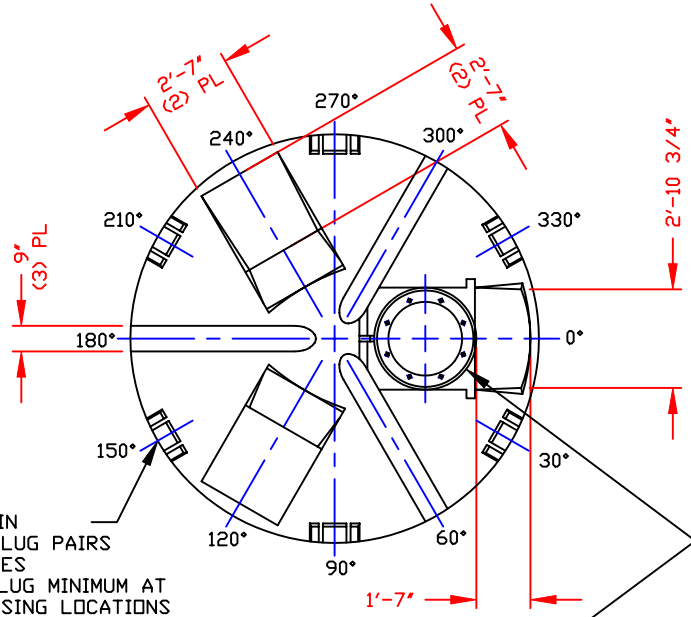

MOLDED-IN
LIFTING LUG PAIRS
(6) PLACES
USE (1) LUG MINIMUM AT
(4) OPPOSING LOCATIONS
FOR LIFTING
(SEE DETAIL)
DO NOT LIFT WITH
STAND ATTACHED

STANDARD COVER:
24"/(8) BOLTS MANWAY COVER/PE (SHOWN)
STOCK NO. 3218 OR
24"/STRAPPED MANWAY COVER/PE
STOCK NO. 3217
(OPTIONAL 24" COVERS AVAILABLE)

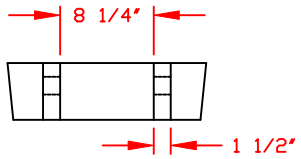

LIFTING LUG DETAIL
(6) PLACES
SCALE: 1"=1'-0"

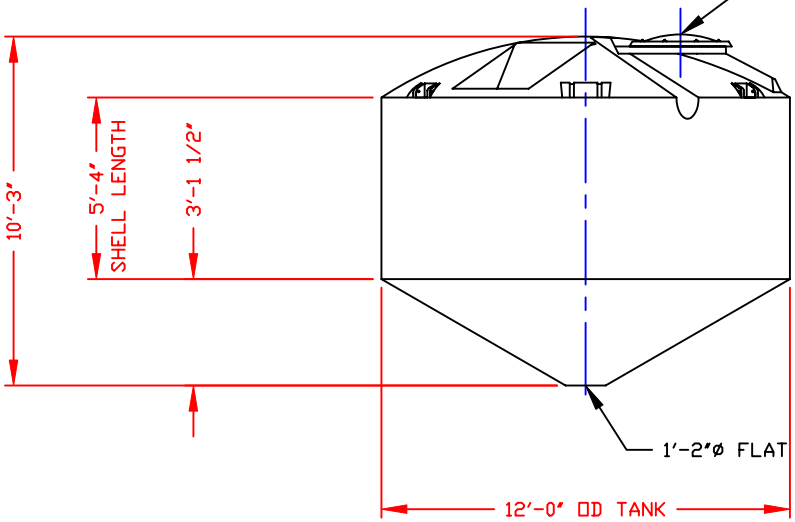

NOTE: (B)
MUST USE FLEXIBLE CONNECTIONS ALL LOWER SIDEWALL FITTINGS

NOTES
1. THIS IS A COMPUTER GENERATED DWG. DO NOT REVISE BY HAND.
2. DIMENSIONS WILL VARY ±3% DUE TO VARIATIONS IN MULTIPLE MOLDS & CONDITIONS PREVALENT DURING MANUFACTURE & USAGE.
3. NO MOLDED IN GALLONAGE MARKERS THIS TANK.

CALCULATED CAPACITIES/ VOLUME IN U.S. GALLONS		
DESIGN CAP	DOME VOL	TOTAL VOL
5391	780	6171

CONFIDENTIAL PROPERTY OF POLY PROCESSING COMPANY NOT FOR REPRINT OR USE WITHOUT PERMISSION

DWG TITLE: 5350 GALLON 30° CONE BOTTOM TANK

SCALE: 1/4"=1'-0"

DATE: 5/22/00

POLY PROCESSING Company
Western Region
P.O. Box 80
8055 South Ash Street
French Camp, CA 95231
(209) 982-4904
FAX (209) 982-0455

DR: MB WILKERSON

CK: J. BRANTLEY

SHEET	COMPUTER FILE	REV
1 OF 1	14105350	B

REV "B" ADDED FITTING NOTE BY:JB 10/24/03 CK:WM

REV "A" REVISED FOR MOLD MODIFICATIONS BY:JB 10/24/03 CK:WM

B-25