NON-CONTROLLED COPY
INFORMATION SUBJECT TO CHANGE WITHOUT NOTICE
VERIFY REV LEVEL OF PAPER COPY WITH REV LEVEL ON PPC WEB SITE

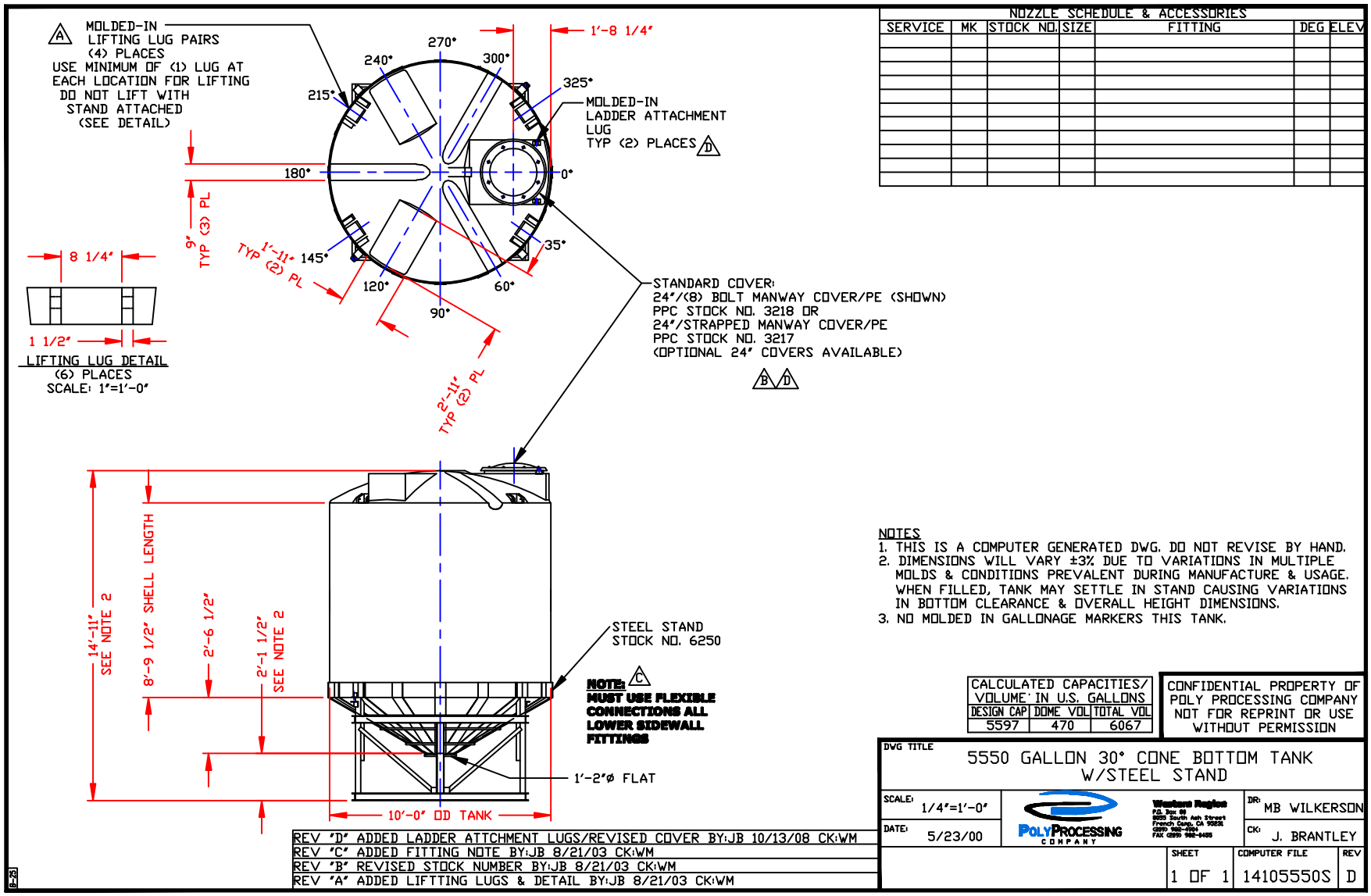

NOZZLE SCHEDULE & ACCESSORIES

SERVICE	MK	STOCK NO.	SIZE	FITTING	DEG	ELEV

NOTES
1. THIS IS A COMPUTER GENERATED DWG. DO NOT REVISE BY HAND.
2. DIMENSIONS WILL VARY ±3% DUE TO VARIATIONS IN MULTIPLE MOLDS & CONDITIONS PREVALENT DURING MANUFACTURE & USAGE. WHEN FILLED, TANK MAY SETTLE IN STAND CAUSING VARIATIONS IN BOTTOM CLEARANCE & OVERALL HEIGHT DIMENSIONS.
3. NO MOLDED IN GALLONAGE MARKERS THIS TANK.

CALCULATED CAPACITIES/ VOLUME IN U.S. GALLONS

DESIGN CAP	DOME VOL	TOTAL VOL
5597	470	6067

CONFIDENTIAL PROPERTY OF POLY PROCESSING COMPANY NOT FOR REPRINT OR USE WITHOUT PERMISSION

DWG TITLE: 5550 GALLON 30° CONE BOTTOM TANK W/STEEL STAND

SCALE: 1/4"=1'-0"
DATE: 5/23/00

POLY PROCESSING COMPANY
Western Region
P.O. Box 69
6650 South Ash Street
French Camp, CA 95231
(209) 982-4926
FAX (209) 982-0485

DR: MB WILKERSON
CK: J. BRANTLEY

SHEET	COMPUTER FILE	REV
1 OF 1	14105550S	D

REV "D" ADDED LADDER ATTCHMENT LUGS/REVISED COVER BY:JB 10/13/08 CK:WM
REV "C" ADDED FITTING NOTE BY:JB 8/21/03 CK:WM
REV "B" REVISED STOCK NUMBER BY:JB 8/21/03 CK:WM
REV "A" ADDED LIFTTING LUGS & DETAIL BY:JB 8/21/03 CK:WM

B-25