NON-CONTROLLED COPY INFORMATION SUBJECT TO CHANGE WITHOUT NOTICE COPY WILL NOT BE UPDATED	COPY ISSUED BY_____. COPY ISSUED ON_____.

NOZZLE SCHEDULE & ACCESSORIES						
SERVICE	MK	STOCK NO.	SIZE	FITTING	DEG	ELEV

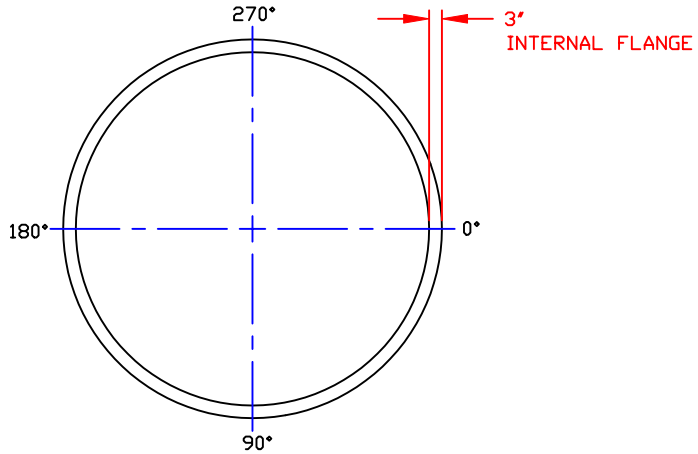

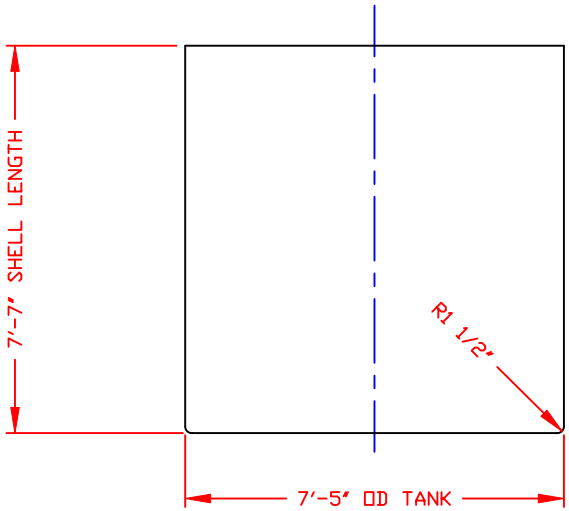

NOTE: (A)
MUST USE FLEXIBLE CONNECTIONS ALL LOWER SIDEWALL FITTINGS

NOTES:
1. THIS IS A COMPUTER GENERATED DWG. DO NOT REVISE BY HAND.
2. DIMENSIONS WILL VARY ±3% DUE TO VARIATIONS IN MULTIPLE MOLDS & CONDITIONS PREVALENT DURING MANUFACTURE & USAGE.
3. MOLDED IN GALLONAGE MARKERS @ 0° IN 200 GAL INCREMENTS STARTING @ 200 GAL UP TO 1600 GAL.

CALCULATED CAPACITY VOLUME IN U.S. GALLONS
DESIGN CAPACITY
2415

CONFIDENTIAL PROPERTY OF POLY PROCESSING COMPANY NOT FOR REPRINT OR USE WITHOUT PERMISSION

DWG TITLE: 2400 GALLON OPEN TOP TANK

SCALE: 3/8"=1'-0"
DATE: 3/15/00

POLY PROCESSING Company
Western Region
P.O. Box 80
8055 South Ash Street
French Camp, CA 95231
(209) 982-4904
FAX (209) 982-0455

DR: MB WILKERSON
CK: D. RECTOR

SHEET	COMPUTER FILE	REV
1 OF 1	11502400	A

REV "A" ADDED FITTING NOTE BY:JB 3/19/03 CK:MBW

B-375