NON-CONTROLLED COPY	COPY ISSUED BY_____.
INFORMATION SUBJECT TO CHANGE WITHOUT NOTICE	
COPY WILL NOT BE UPDATED	COPY ISSUED ON_____.

NOZZLE SCHEDULE & ACCESSORIES

SERVICE	MK	STOCK NO.	SIZE	FITTING	DEG	ELEV

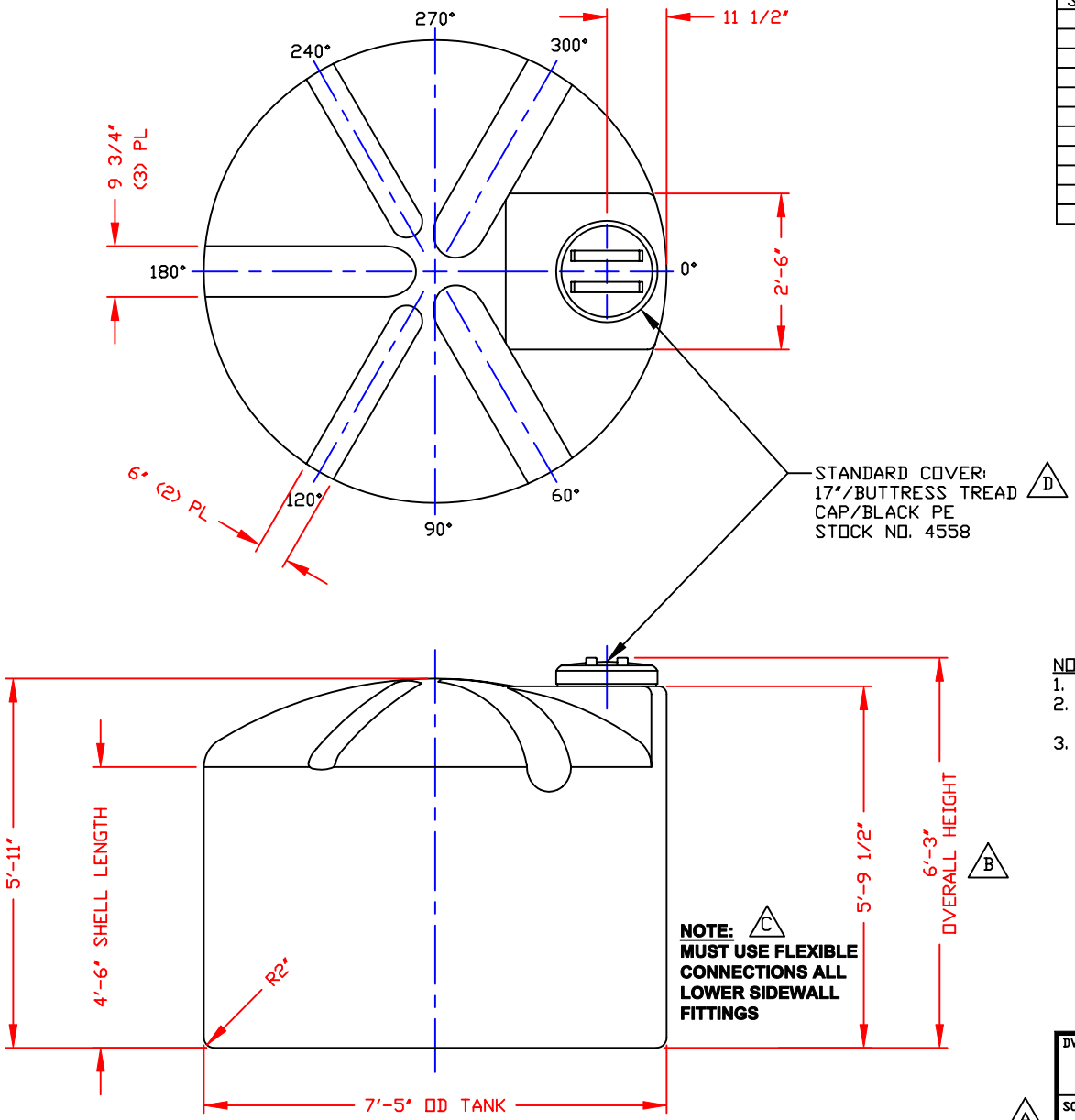

NOTES
1. THIS IS A COMPUTER GENERATED DWG. DO NOT REVISE BY HAND.
2. DIMENSIONS WILL VARY ±3% DUE TO VARIATIONS IN MULTIPLE MOLDS & CONDITIONS PREVALENT DURING MANUFACTURE & USAGE.
3. MOLDED IN GALLONAGE MARKERS @ 0° IN 100 GAL INCREMENTS STARTING @ 100 GAL UP TO 1200 GAL. AVOID WHEN PLACING FITTINGS.

CALCULATED CAPACITIES/ VOLUME IN U.S. GALLONS		
DESIGN CAP	DOME VOL	TOTAL VOL
1413	185	1598

CONFIDENTIAL PROPERTY OF POLY PROCESSING COMPANY NOT FOR REPRINT OR USE WITHOUT PERMISSION

DWG TITLE: 1400 GALLON UPRIGHT TANK

SCALE: 1/2"=1'-0"
DATE: 2/28/00

POLY PROCESSING Company
Western Region
P.O. Box 80
8055 South Ash Street
French Camp, CA 95231
(209) 982-4904
FAX (209) 982-0455

DR: MB WILKERSON
CK: D. RECTOR

SHEET: 1 OF 1
COMPUTER FILE: 11001400
REV: D

A

REV "D" CORRECTED LID BY:MBW 2/20/04 CK:JB	
REV "C" ADDED FITTING NOTE BY:JB 3/19/03 CK:MBW	
REV "B" ADDED DIMENSION BY:JB 10/16/02 CK:MBW	
REV "A" DID SAY "CENTRAL REGION..." BY:MBW 5/15/00 CK:DR	

B-5