NON-CONTROLLED COPY

INFORMATION SUBJECT TO CHANGE WITHOUT NOTICE

VERIFY REV LEVEL OF PAPER COPY WITH REV LEVEL ON PPC WEB SITE

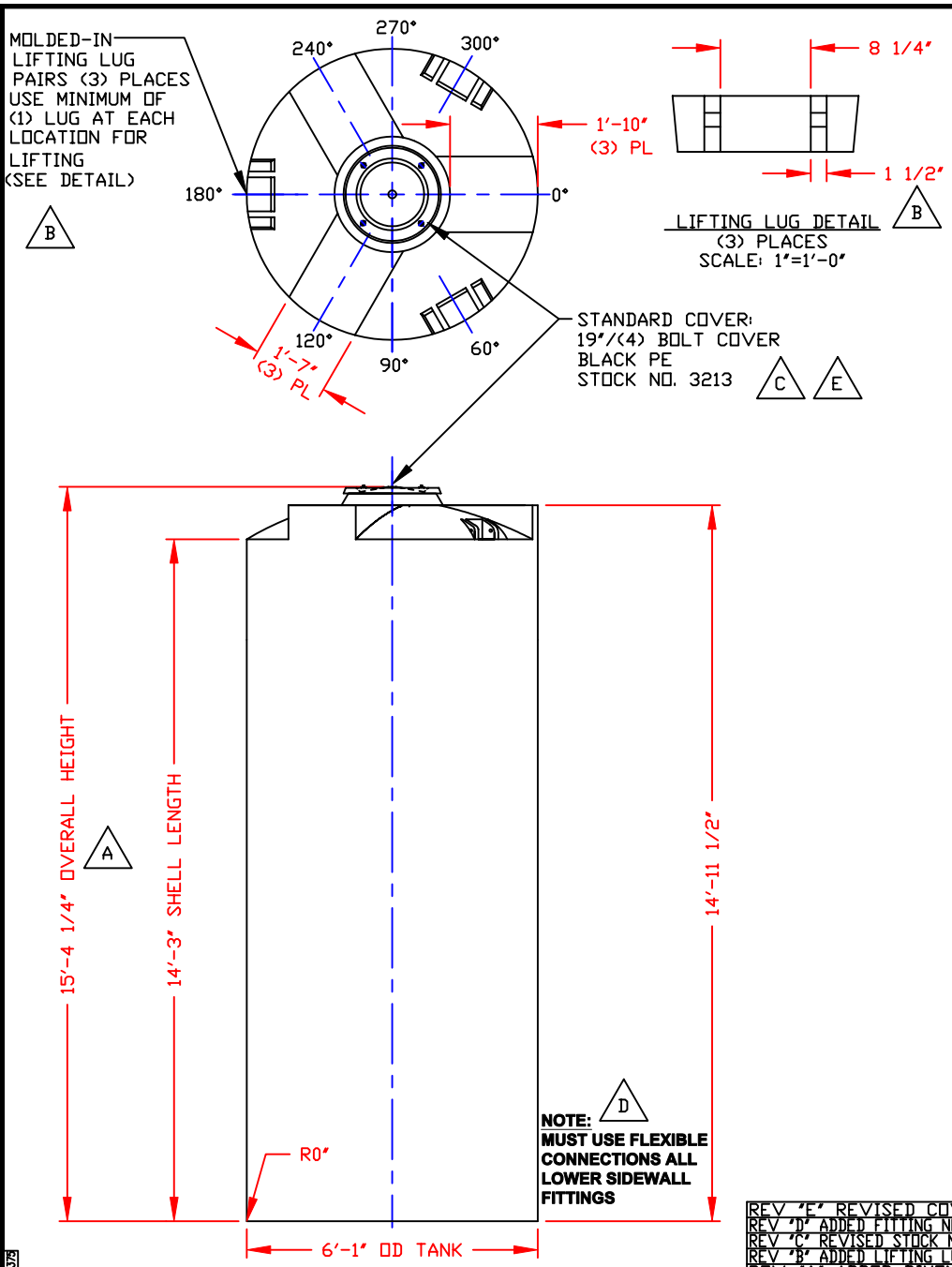

NOZZLE SCHEDULE & ACCESSORIES

SERVICE	MK	STOCK NO.	SIZE	FITTING	DEG	ELEV

NOTES

1. THIS IS A COMPUTER GENERATED DWG. DO NOT REVISE BY HAND.
2. DIMENSIONS WILL VARY ±3% DUE TO VARIATIONS IN MULTIPLE MOLDS & CONDITIONS PREVALENT DURING MANUFACTURE & USAGE.
3. NO MOLDED IN GALLONAGE MARKERS THIS TANK.

CALCULATED CAPACITIES/ VOLUME IN U.S. GALLONS

DESIGN CAP	DOME VOL	TOTAL VOL
3012	45	3057

CONFIDENTIAL PROPERTY OF POLY PROCESSING COMPANY NOT FOR REPRINT OR USE WITHOUT PERMISSION

REV "E" REVISED COVER BY:MBW 3/10/05 CK:WM
REV "D" ADDED FITTING NOTE BY:JB 2/18/03 CK:MBW
REV "C" REVISED STOCK NUMBER BY:JB 2/18/03 CK:MBW
REV "B" ADDED LIFTING LUGS & DETAIL BY:JB 2/18/03 CK:WM
REV "A" ADDED DIMENSION BY:JB 10/18/02 CK:MBW

DWG TITLE: 3000 GALLON UPRIGHT TANK

SCALE: 3/8"=1'-0"

DATE: 3/1/00

POLYPROCESSING COMPANY

Western Region
P.O. Box 60
8055 South Ash Street
French Camp, CA 95231
(209) 982-4904
FAX (209) 982-0455

DR: MB WILKERSON

CK: D. RECTOR

SHEET	COMPUTER FILE	REV
1 OF 1	11003000	E