NON-CONTROLLED COPY

INFORMATION SUBJECT TO CHANGE WITHOUT NOTICE

VERIFY REV LEVEL OF PAPER COPY WITH REV LEVEL ON PPC WEB SITE

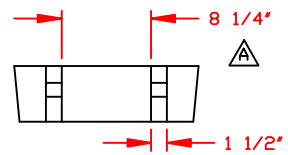

LIFTING LUG DETAIL
(6) PLACES
SCALE: 1"=1'-0"

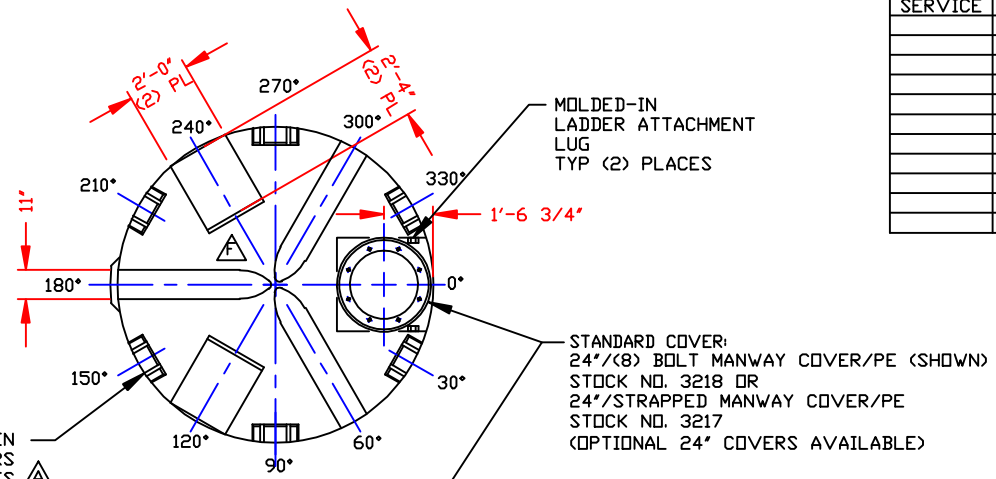

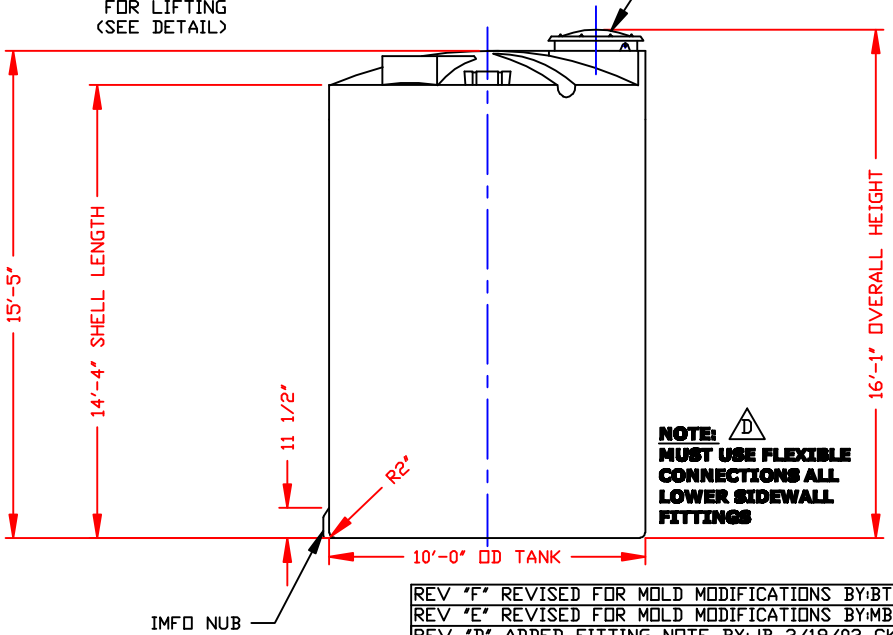

NOTE: D
MUST USE FLEXIBLE CONNECTIONS ALL LOWER SIDEWALL FITTINGS

NOZZLE SCHEDULE & ACCESSORIES

SERVICE	MK	STOCK NO.	SIZE	FITTING	DEG	ELEV

NOTES:
1. THIS IS A COMPUTER GENERATED DWG. DO NOTE REVISE BY HAND.
2. DIMENSIONS WILL VARY ±3% DUE TO VARIATIONS IN MULTIPLE MOLDS & CONDITIONS PREVALENT DURING MANUFACTURE & USAGE.
3. NO MOLDED IN GALLONAGE MARKERS THIS TANK.

CALCULATED CAPACITIES/ VOLUME IN U.S. GALLONS		
DESIGN CAP	DOME VOL	TOTAL VOL
8094	250	8344

CONFIDENTIAL PROPERTY OF POLY PROCESSING COMPANY NOT FOR REPRINT OR USE WITHOUT PERMISSION

REV	DESCRIPTION
F	REVISED FOR MOLD MODIFICATIONS BY:BT 6/20/08 CK:WM
E	REVISED FOR MOLD MODIFICATIONS BY:MBW 3/23/07 CK:WM
D	ADDED FITTING NOTE BY:JB 3/19/03 CK:MBW
C	REVISED STOCK NUMBER BY:JB 3/19/03 CK:MBW
B	ADDED DIMENSION BY:JB 10/21/02 CK:MBW
A	ADDED LIFTING LUGS & DETAIL BY:JB 8/22/02 CK:WM

DWG TITLE: 8050 GALLON UPRIGHT TANK

SCALE: 1/4"=1'-0"

DATE: 3/3/00

POLY PROCESSING COMPANY

Western Region
P.O. Box 80
8053 South Ash Street
French Camp, CA 95231
(209) 982-4904
FAX (209) 982-0435

DR: MB WILKERSON

CK: D. RECTOR

SHEET	COMPUTER FILE	REV
1 OF 1	11008050	F

B-25