NON-CONTROLLED COPY

INFORMATION SUBJECT TO CHANGE WITHOUT NOTICE

VERIFY REV LEVEL OF PAPER COPY WITH REV LEVEL ON PPC WEB SITE

REV "A" ADDED FITTING NOTE BY:JB 3/3/03 CK:MBW
REV "B" CORRECTED IMFO BY:MBW 4/12/05 CK:JB
REV "C" FLATS ADDED TO TOP BY:MBW 6/27/05 CK:JB

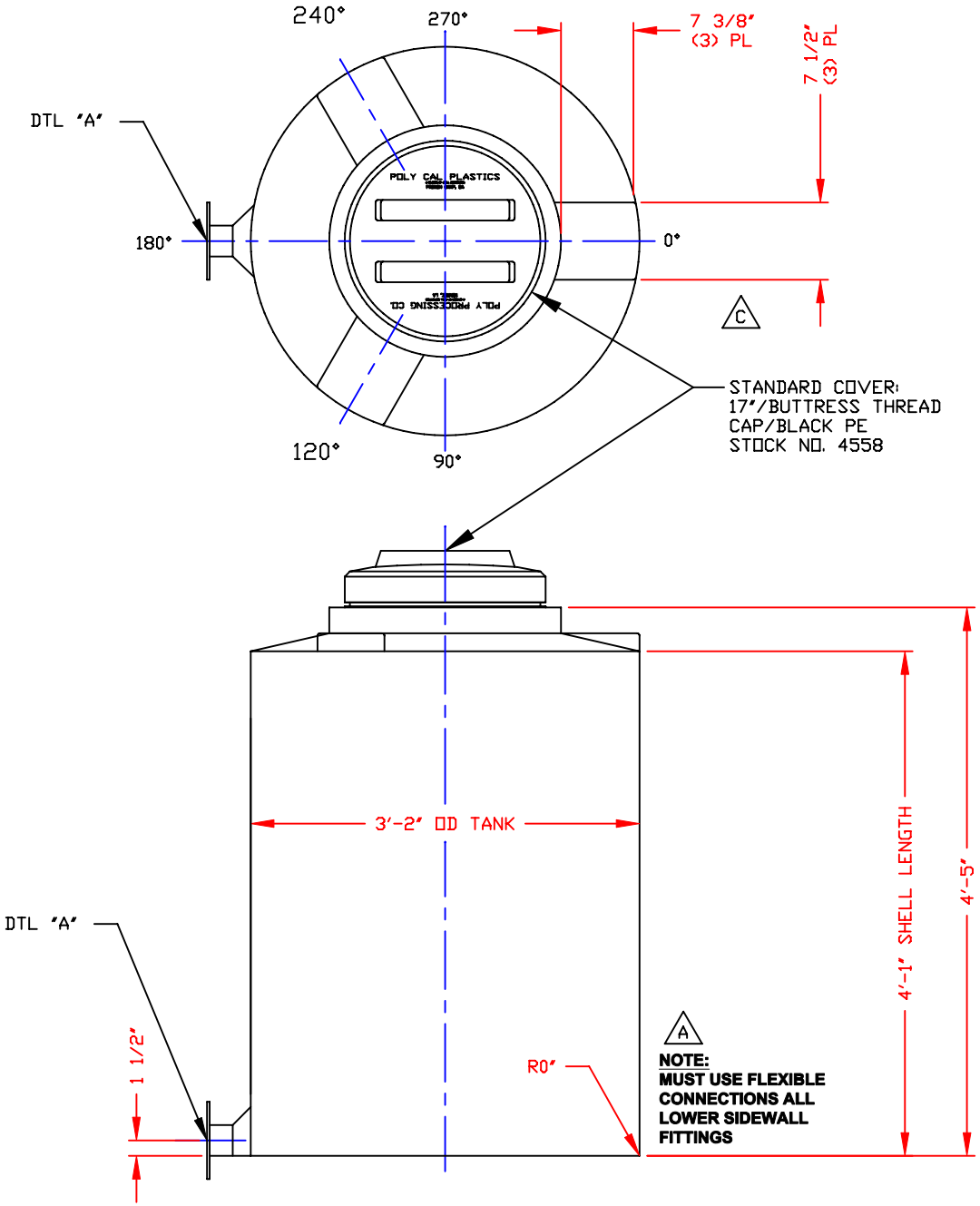

NOZZLE SCHEDULE & ACCESSORIES

SERVICE	MK	STOCK NO.	SIZE	FITTING	DEG	ELEV

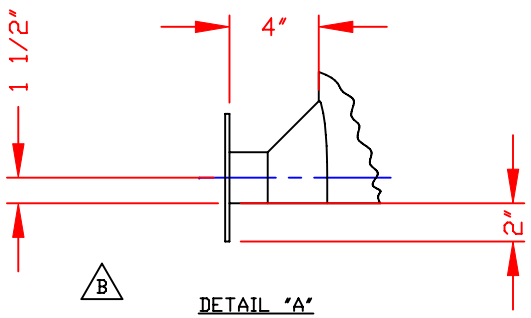

DETAIL "A"
(INTEGRALLY MOLDED FLANGED OUTLET)
AVAILABLE IN 3" SIZE ONLY

NOTES
1. THIS IS A COMPUTER GENERATED DWG. DO NOT REVISE BY HAND.
2. DIMENSIONS WILL VARY ±3% DUE TO VARIATIONS IN MULTIPLE MOLDS & CONDITIONS PREVALENT DURING MANUFACTURE & USAGE.
3. NO MOLDED IN GALLONAGE MARKERS THIS TANK.

CALCULATED CAPACITIES/ VOLUME IN U.S. GALLONS	
DESIGN CAP	TOTAL VOL
233	240

CONFIDENTIAL PROPERTY OF POLY PROCESSING COMPANY NOT FOR REPRINT OR USE WITHOUT PERMISSION

DWG TITLE: 230 GALLON IMFO TANK

SCALE: 1"=1'-0"

DATE: 3/6/00

POLYPROCESSING COMPANY

Western Region
P.O. Box 80
8000 South Ash Street
French Camp, CA 95231
(209) 982-4904
FAX (209) 982-0455

DR: MB WILKERSON

CK: D. RECTOR

SHEET: 1 OF 1

COMPUTER FILE: 11100230

REV: C

B1