NON-CONTROLLED COPY

INFORMATION SUBJECT TO CHANGE WITHOUT NOTICE

VERIFY REV LEVEL OF PAPER COPY WITH REV LEVEL ON PPC WEB SITE

REV "A" ADDED DIMENSION BY:JB 10/18/02 CK:MBW
REV "B" ADDED LIFTING LUGS & DETAIL BY:JB 1/20/03 CK:WM
REV "C" REVISED STOCK NUMBER BY:JB 1/20/03 CK:WM
REV "D" ADDED FITTING NOTE BY:JB 2/3/03 CK:MBW
REV "E" REVISED IMFO FLANGE BY:MBW 3/10/05 CK:WM
REV "F" REVISED COVER BY:MBW 3/10/05 CK:WM

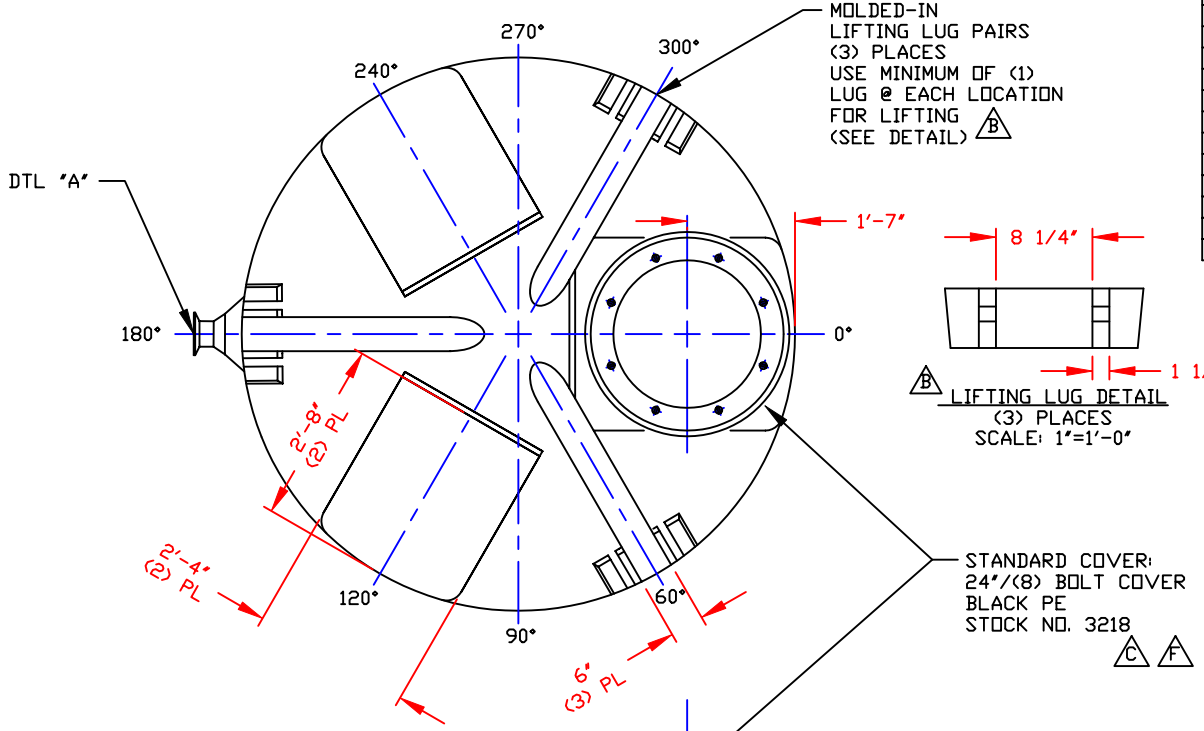

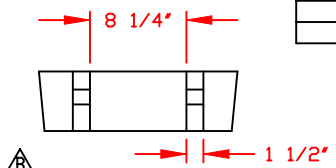

B LIFTING LUG DETAIL
(3) PLACES
SCALE: 1"=1'-0"

NOZZLE SCHEDULE & ACCESSORIES

SERVICE	MK	STOCK NO.	SIZE	FITTING	DEG	ELEV

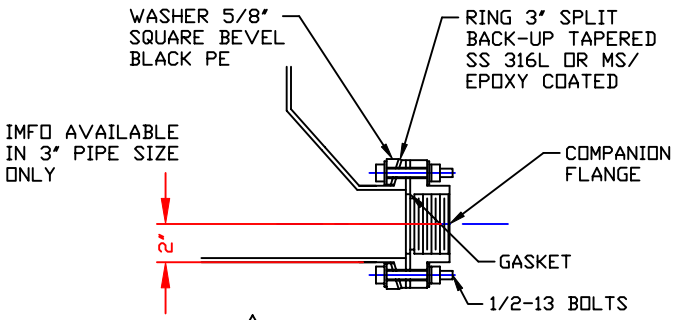

E

IMFO NOZZLE DETAIL "A"
(INTEGRALLY MOLDED FLANGED OUTLET)
SCALE: NONE

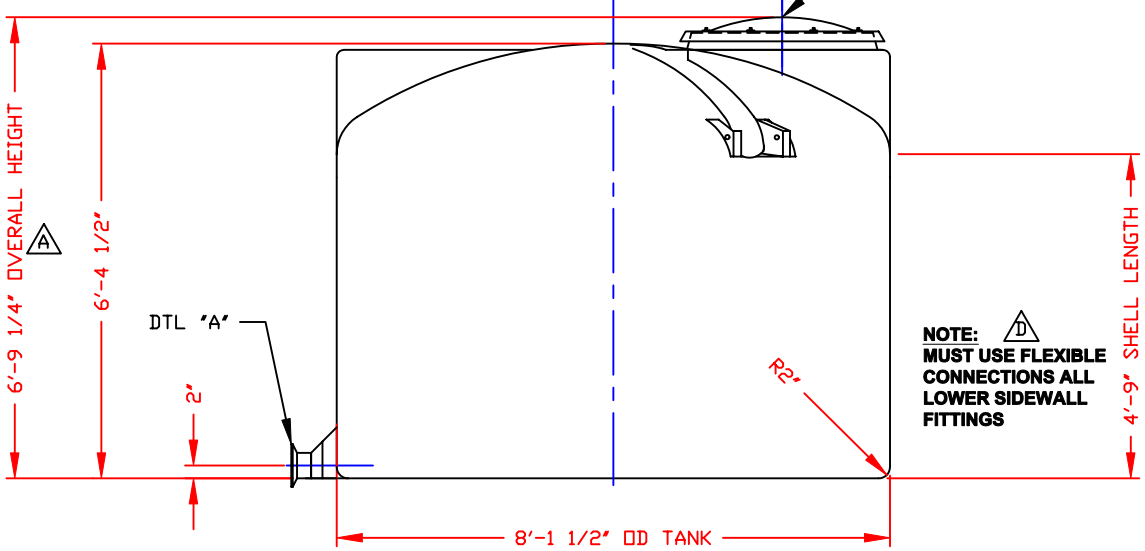

NOTE: D
MUST USE FLEXIBLE CONNECTIONS ALL LOWER SIDEWALL FITTINGS

NOTES
1. THIS IS A COMPUTER GENERATED DWG. DO NOT REVISE BY HAND.
2. DIMENSIONS WILL VARY ±3% DUE TO VARIATIONS IN MULTIPLE MOLDS & CONDITIONS PREVALENT DURING MANUFACTURE & USAGE.
3. NO MOLDED IN GALLONAGE MARKERS THIS TANK.

CALCULATED CAPACITIES/ VOLUME IN U.S. GALLONS		
DESIGN CAP	DOME VOL	TOTAL VOL
1823	372	2195

CONFIDENTIAL PROPERTY OF POLY PROCESSING COMPANY NOT FOR REPRINT OR USE WITHOUT PERMISSION

DWG TITLE: 1800 GALLON IMFO TANK

SCALE: 1/2"=1'-0"

DATE: 3/7/00

POLYPROCESSING COMPANY

Western Region
P.O. Box 80
8055 South Ash Street
French Camp, CA 95231
(209) 982-4904
FAX (209) 982-0455

DR: MB WILKERSON

CK: D. RECTOR

SHEET	COMPUTER FILE	REV
1 OF 1	11101800	F

B-5