NON-CONTROLLED COPY

INFORMATION SUBJECT TO CHANGE WITHOUT NOTICE

VERIFY REV LEVEL OF PAPER COPY WITH REV LEVEL ON PPC WEB SITE

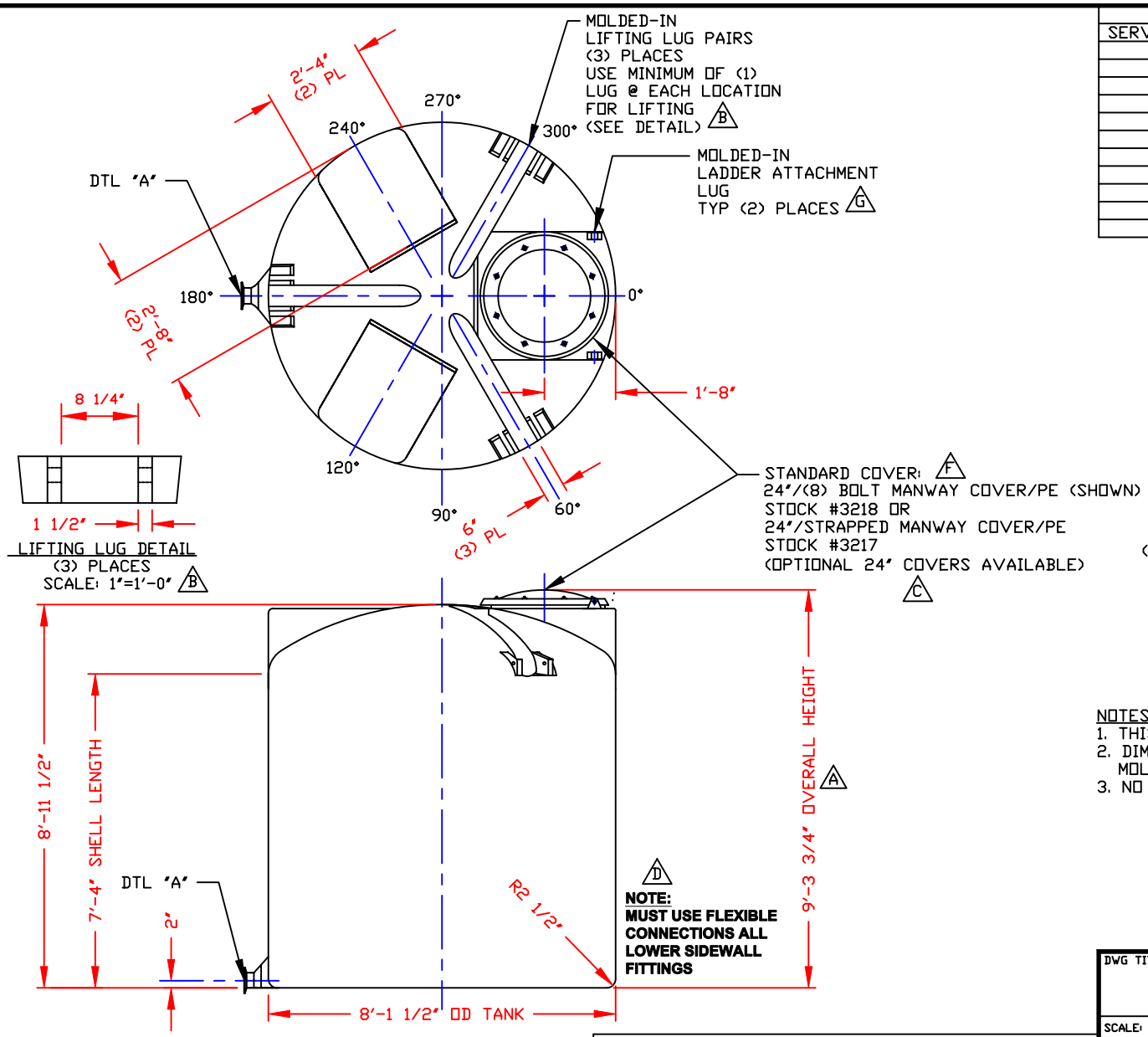

NOZZLE SCHEDULE & ACCESSORIES

SERVICE	MK	STOCK NO.	SIZE	FITTING	DEG	ELEV

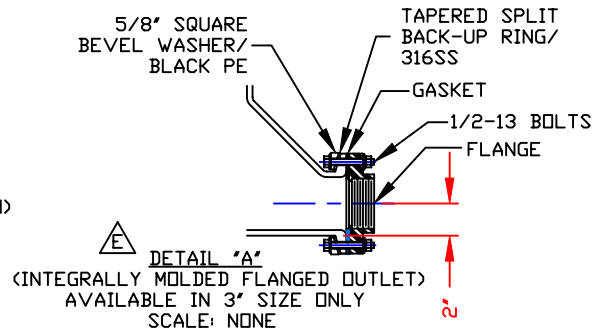

NOTES

1. THIS IS A COMPUTER GENERATED DWG. DO NOT REVISE BY HAND.
2. DIMENSIONS WILL VARY ±3% DUE TO VARIATIONS IN MULTIPLE MOLDS & CONDITIONS PREVALENT DURING MANUFACTURE & USAGE.
3. NO MOLDED IN GALLONAGE MARKERS THIS TANK.

CALCULATED CAPACITIES/ VOLUME IN U.S. GALLONS

DESIGN CAP	DOME VOL	TOTAL VOL
2804	372	3176

CONFIDENTIAL PROPERTY OF POLY PROCESSING COMPANY NOT FOR REPRINT OR USE WITHOUT PERMISSION

DWG TITLE: 2800 GALLON IMFO TANK

SCALE: 3/8"=1'-0"

DATE: 3/7/00

POLYPROCESSING COMPANY

Central Region
P.O. Box 4150 (71211)
2201 Old Sterlington Rd.
Monroe, LA 71203
(318) 343-7565
FAX (318) 343-6795

DR: MB WILKERSON

CK: D. RECTOR

SHEET: 1 OF 1

COMPUTER FILE: 11102800

REV: G

REV "G"	ADDED LADDER ATTACHMENT LUGS	BY:JB 1/28/05	CK:WM
REV "F"	REVISED MANWAY COVER	BY:JB 1/28/05	CK:WM
REV "E"	REVISED IMFO STYLE	BY:JB 5/5/03	CK:WM
REV "D"	ADDED FITTING NOTE	BY:JB 2/5/03	CK:MBW
REV "C"	REVISED STOCK NUMBER	BY:JB 1/23/03	CK:WM
REV "B"	ADDED LIFTING LUGS & DETAIL	BY:JB 1/23/03	CK:WM
REV "A"	ADDED DIMENSION	BY:JB 10/18/02	CK:MBW