NON-CONTROLLED COPY

INFORMATION SUBJECT TO CHANGE WITHOUT NOTICE

VERIFY REV LEVEL OF PAPER COPY WITH REV LEVEL ON PPC WEB SITE

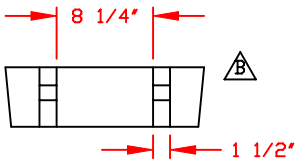

LIFTING LUG DETAIL
(4) PLACES
SCALE: 1"=1'-0"

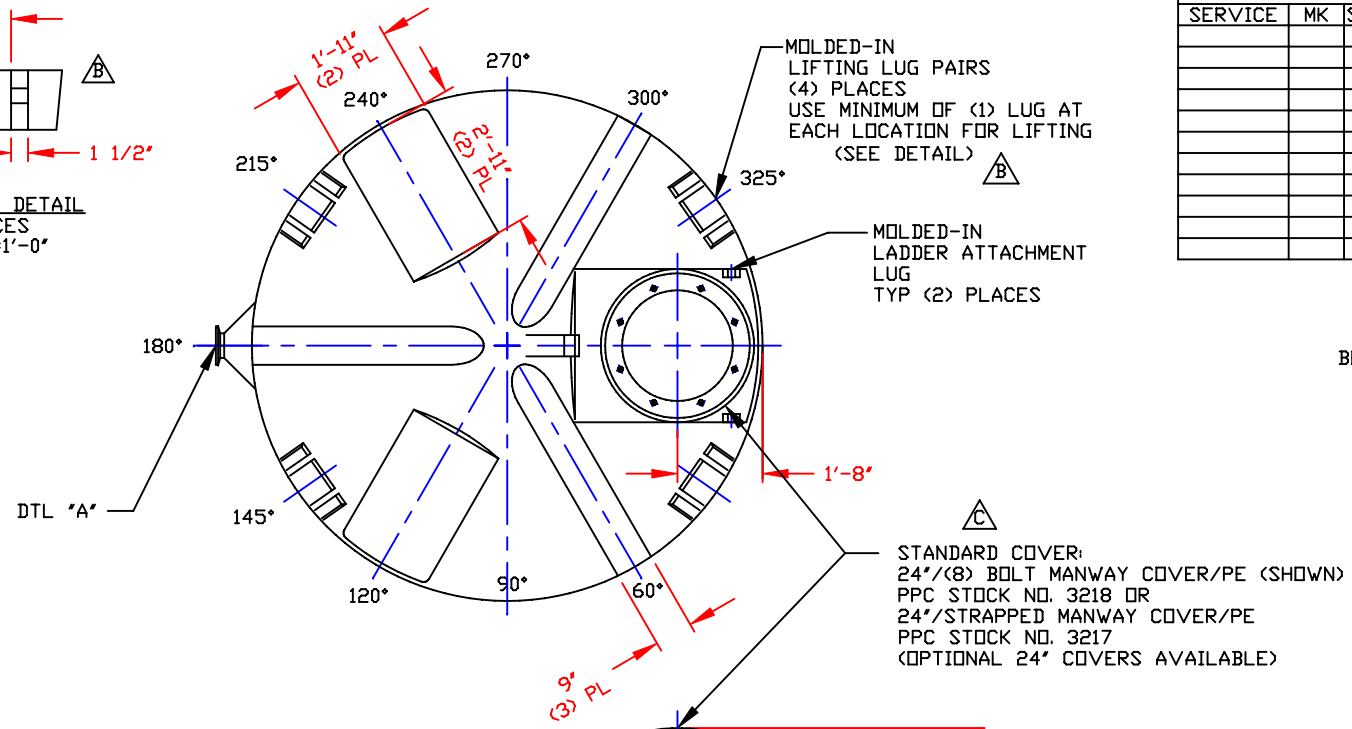

NOZZLE SCHEDULE & ACCESSORIES

SERVICE	MK	STOCK NO.	SIZE	FITTING	DEG	ELEV

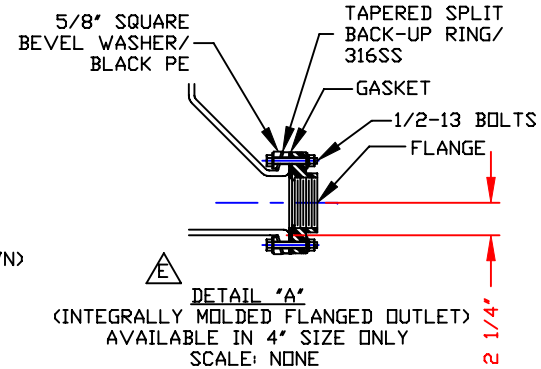

DETAIL "A"
(INTEGRALLY MOLDED FLANGED OUTLET)
AVAILABLE IN 4" SIZE ONLY
SCALE: NONE

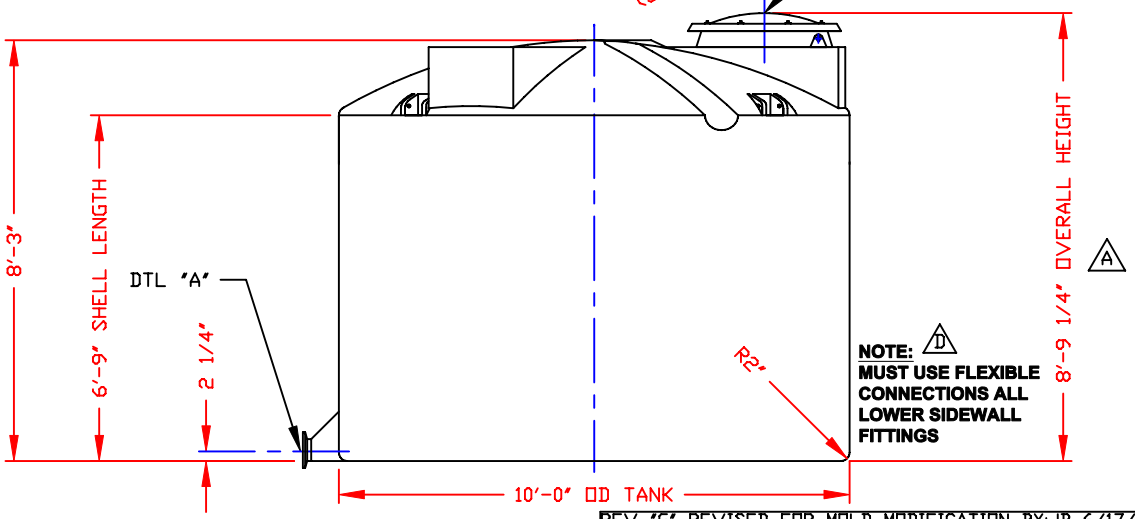

NOTES
1. THIS IS A COMPUTER GENERATED DWG. DO NOT REVISE BY HAND.
2. DIMENSIONS WILL VARY ±3% DUE TO VARIATIONS IN MULTIPLE MOLDS & CONDITIONS PREVALENT DURING MANUFACTURE & USAGE.
3. NO MOLDED IN GALLONAGE MARKERS THIS TANK.

CALCULATED CAPACITIES/ VOLUME IN U.S. GALLONS		
DESIGN CAP	DOME VOL	TOTAL VOL
3922	470	4392

CONFIDENTIAL PROPERTY OF POLY PROCESSING COMPANY NOT FOR REPRINT OR USE WITHOUT PERMISSION

REV	REVISED	BY	CK
"G"	FOR MOLD MODIFICATION	JB 6/17/05	WM
"F"	FOR MOLD MODIFICATION	MBW 2/20/04	JB
"E"	IMFO STYLE	JB 4/29/03	WM
"D"	ADDED FITTING NOTE	JB 2/27/02	MBW
"C"	REVISED STOCK NUMBER	JB 2/27/02	MBW
"B"	ADDED LIFTING LUGS & DETAIL	JB 10/31/02	WM
"A"	ADDED DIMENSION	JB 10/18/02	MBW

DWG TITLE: 3900 GALLON IMFO TANK

SCALE: 3/8"=1'-0"

DATE: 3/8/00

POLYPROCESSING COMPANY
Western Region
P.O. Box 80
8055 South Ash Street
French Camp, CA 95231
(209) 982-4904
FAX (209) 982-0455

DR: MB WILKERSON

CK: D. RECTOR

SHEET: 1 OF 1

COMPUTER FILE: 11103900

REV: G

B-373