NON-CONTROLLED COPY
INFORMATION SUBJECT TO CHANGE WITHOUT NOTICE
VERIFY REV LEVEL OF PAPER COPY WITH REV LEVEL ON PPC WEB SITE

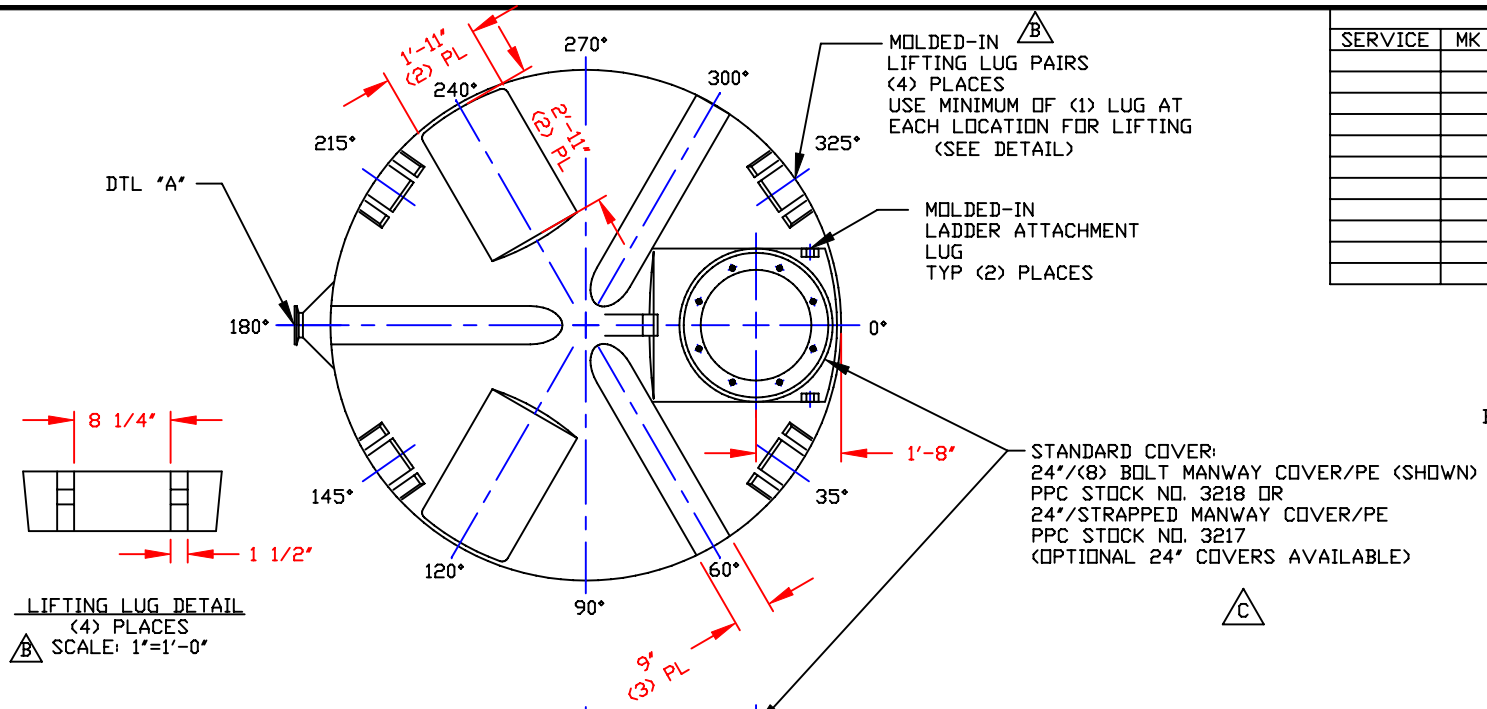

NOZZLE SCHEDULE & ACCESSORIES						
SERVICE	MK	STOCK NO.	SIZE	FITTING	DEG	ELEV

LIFTING LUG DETAIL
(4) PLACES
B SCALE: 1"=1'-0"

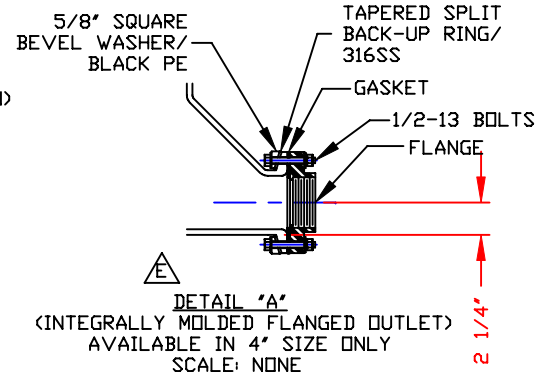

E
DETAIL "A"
(INTEGRALLY MOLDED FLANGED OUTLET)
AVAILABLE IN 4" SIZE ONLY
SCALE: NONE

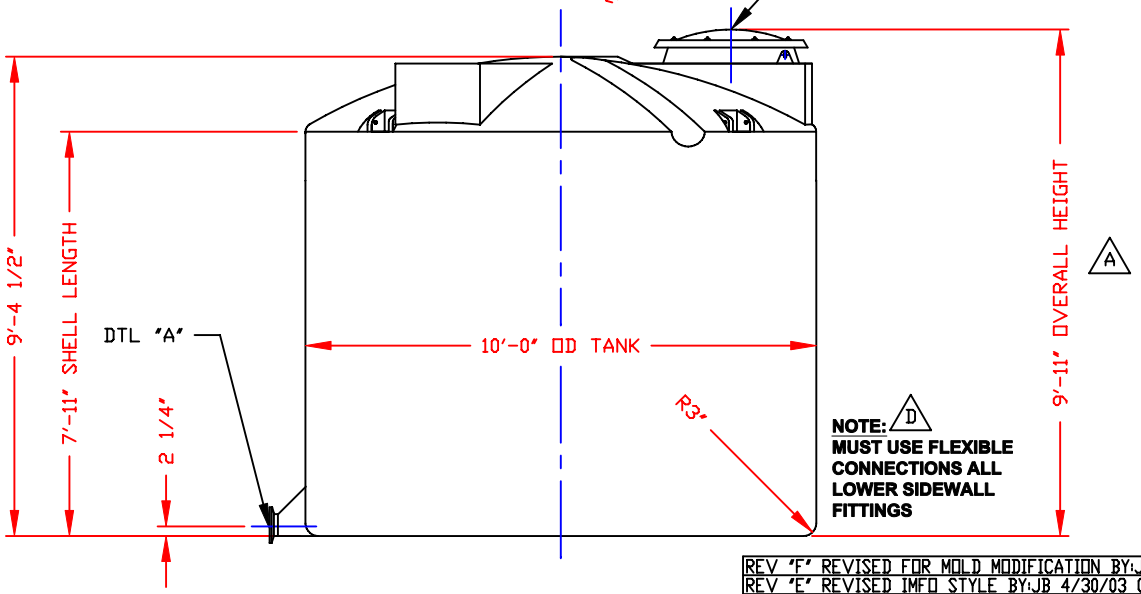

NOTE: D
MUST USE FLEXIBLE CONNECTIONS ALL LOWER SIDEWALL FITTINGS

NOTES
1. THIS IS A COMPUTER GENERATED DWG. DO NOT REVISE BY HAND.
2. DIMENSIONS WILL VARY ±3% DUE TO VARIATIONS IN MULTIPLE MOLDS & CONDITIONS PREVALENT DURING MANUFACTURE & USAGE.
3. NO MOLDED IN GALLONAGE MARKERS THIS TANKS.

CALCULATED CAPACITIES/ VOLUME IN U.S. GALLONS		
DESIGN CAP	DOME VOL	TOTAL VOL
4580	470	5050

CONFIDENTIAL PROPERTY OF POLY PROCESSING COMPANY NOT FOR REPRINT OR USE WITHOUT PERMISSION

REV	DESCRIPTION	BY	DATE	CK
F	REVISED FOR MOLD MODIFICATION	JB	6/17/05	WM
E	REVISED IMFO STYLE	JB	4/30/03	WM
D	ADDED FITTING NOTE	JB	2/27/03	MBW
C	REVISED STOCK NUMBER	JB	2/27/03	MBW
B	ADDED LIFTING LUG & DETAIL	JB	10/31/02	WM
A	ADDED DIMENSION	JB	10/21/02	MBW

DWG TITLE: 4550 GALLON IMFO TANK

SCALE: 3/8"=1'-0"
DATE: 3/8/00

POLYPROCESSING COMPANY
Western Region
P.O. Box 90
8055 South Ash Street
French Camp, CA 95231
(209) 982-4904
FAX (209) 982-0455

DR: MB WILKERSON
CK: D. RECTOR

SHEET	COMPUTER FILE	REV
1 OF 1	11104550	F

B-375