NON-CONTROLLED COPY

INFORMATION SUBJECT TO CHANGE WITHOUT NOTICE

VERIFY REV LEVEL OF PAPER COPY WITH REV LEVEL ON PPC WEB SITE

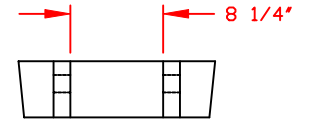

LIFTING LUG DETAIL
(3) PLACES
SCALE: 1"=1'-0"
B

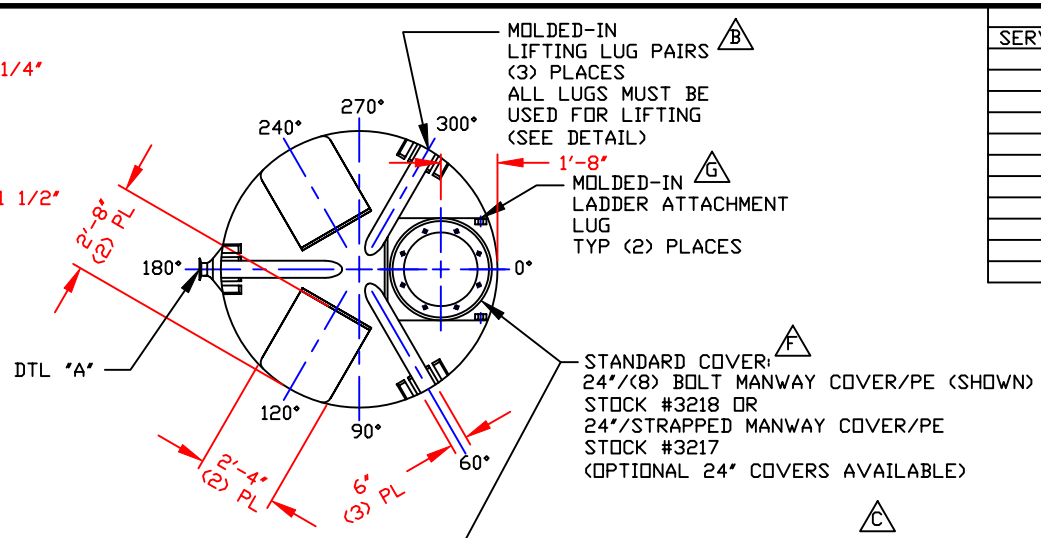

NOZZLE SCHEDULE & ACCESSORIES						
SERVICE	MK	STOCK NO.	SIZE	FITTING	DEG	ELEV

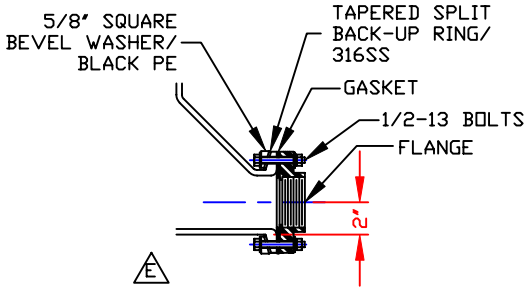

DETAIL "A"
(INTEGRALLY MOLDED FLANGED OUTLET)
AVAILABLE IN 3" SIZE ONLY
SCALE: NONE

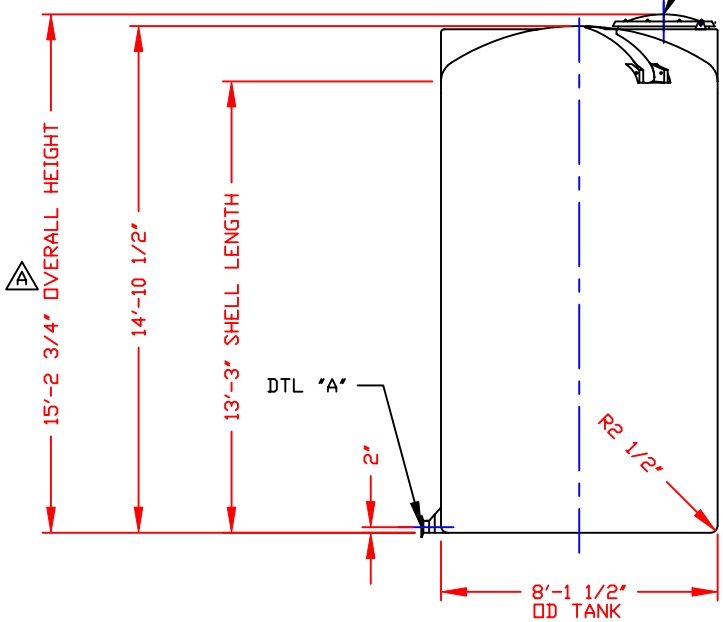

D

NOTE:
MUST USE FLEXIBLE CONNECTIONS ALL LOWER SIDEWALL FITTINGS

NOTES
1. THIS IS A COMPUTER GENERATED DWG. DO NOT REVISE BY HAND.
2. DIMENSIONS MAY VARY ±3% DUE TO VARIATIONS IN MULTIPLE MOLDS & CONDITIONS PREVALENT DURING MANUFACTURE & USAGE.
3. NO MOLDED IN GALLONAGE MARKERS THIS TANK.

CALCULATED CAPACITIES/ VOLUME IN U.S. GALLONS		
DESIGN CAP	DOME VOL	TOTAL VOL
5007	372	5379

CONFIDENTIAL PROPERTY OF POLY PROCESSING COMPANY NOT FOR REPRINT OR USE WITHOUT PERMISSION

DWG TITLE: 5000 GALLON IMFO TANK

SCALE: 1/4"=1'-0"

DATE: 3/8/00

POLYPROCESSING COMPANY

Western Region
P.O. Box 90
8055 South Ash Street
French Camp, CA 95231
(209) 982-4904
FAX (209) 982-0455

DR: MB WILKERSON

CK: D. RECTOR

SHEET	COMPUTER FILE	REV
1 OF 1	11105000	G

REV	DESCRIPTION	BY	DATE	CK
G	ADDED LADDER ATTACHMENT LUGS	JB	2/1/05	WM
F	REVISED MANWAY COVER	JB	2/1/05	WM
E	REVISED IMFO STYLE	JB	5/5/03	WM
D	ADDED FITTING NOTE	JB	2/3/03	MBW
C	REVISED STOCK NUMBER	JB	1/17/03	WM
B	ADDED LIFTING LUGS & DETAIL	JB	1/17/03	WM
A	ADDED DIMENSION	JB	10/21/02	MBW

B-25