NON-CONTROLLED COPY

INFORMATION SUBJECT TO CHANGE WITHOUT NOTICE

VERIFY REV LEVEL OF PAPER COPY WITH REV LEVEL ON PPC WEB SITE

NOZZLE SCHEDULE & ACCESSORIES

SERVICE	MK	STOCK NO.	SIZE	FITTING	DEG	ELEV

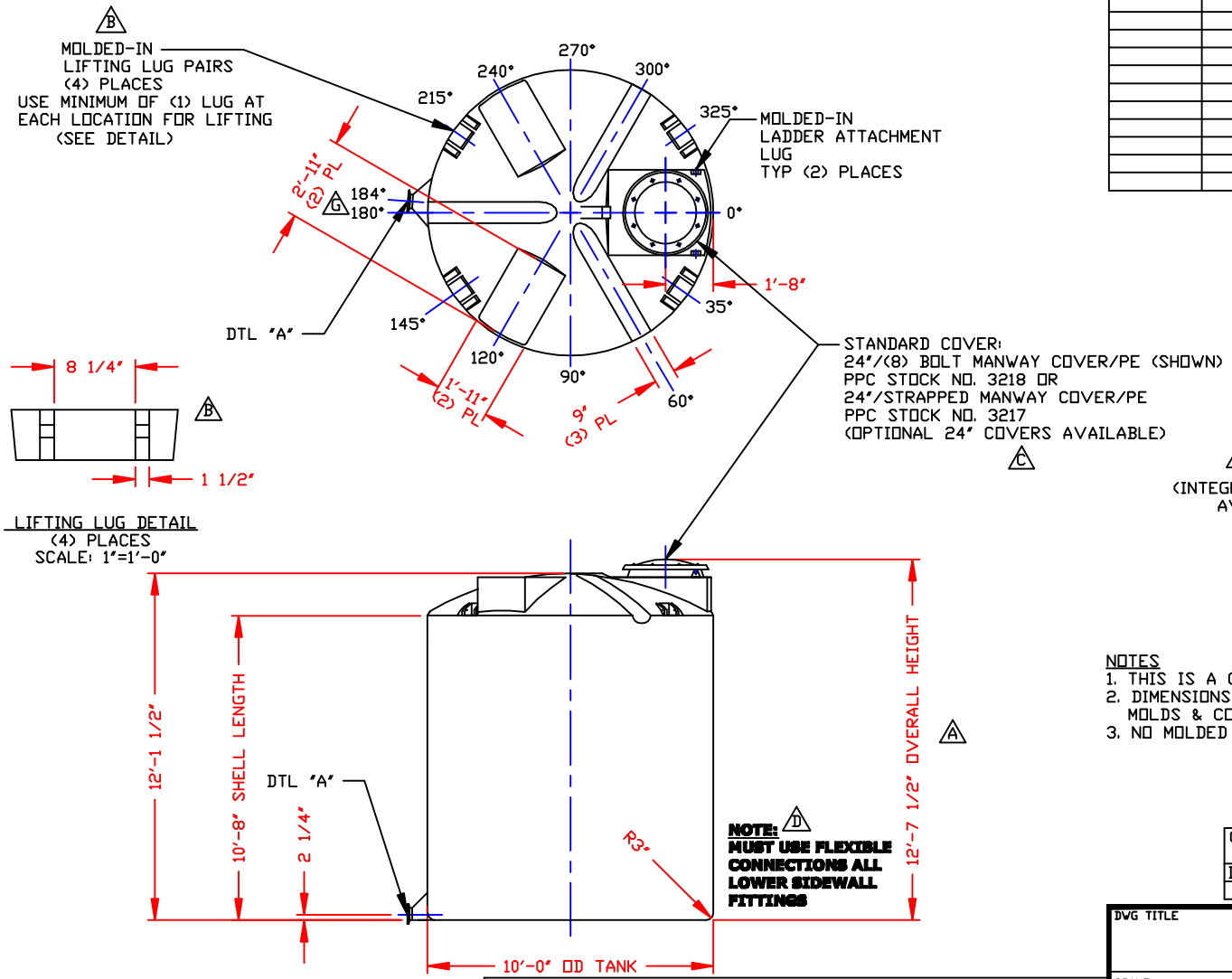

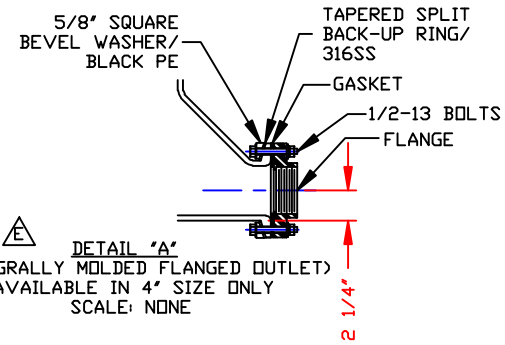

NOTES

1. THIS IS A COMPUTER GENERATED DWG. DO NOT REVISE BY HAND.
2. DIMENSIONS WILL VARY ±3% DUE TO VARIATIONS IN MULTIPLE MOLDS & CONDITIONS PREVALENT DURING MANUFACTURE & USAGE.
3. NO MOLDED IN GALLONAGE MARKERS THIS TANK.

CALCULATED CAPACITIES/ VOLUME IN U.S. GALLONS		
DESIGN CAP	DOME VOL	TOTAL VOL
6126	470	6596

CONFIDENTIAL PROPERTY OF POLY PROCESSING COMPANY NOT FOR REPRINT OR USE WITHOUT PERMISSION

DWG TITLE: 6100 GALLON IMFO TANK

SCALE: 1/4"=1'-0"

DATE: 3/9/00

POLYPROCESSING COMPANY LLC
Western Region
P.O. Box 80
8055 South Ash Street
French Camp, CA 95231
(209) 982-0904
FAX (209) 982-0455

DR: MB WILKERSON

CK: D. RECTOR

SHEET: 1 OF 1

COMPUTER FILE: 11106100

REV: G

REV "G"	REVISED IMFO LOCATION BY:JB 7/24/09 CK:WM
REV "F"	REVISED FOR MOLD MODIFICATION BY:JB 6/16/05 CK:WM
REV "E"	REVISED IMFO STYLE BY:JB 4/30/03 CK:WM
REV "D"	ADDED FITTING NOTE BY:JB 2/27/03 CK:MBW
REV "C"	REVISED STOCK NUMBER BY:JB 2/27/03 CK:MBW
REV "B"	ADDED LIFTTING LUGS & DETAIL BY:JB 10/31/02 CK:WM
REV "A"	ADDED DIMENSION BY:JB 10/21/02 CK:MBW

B-25