NON-CONTROLLED COPY

INFORMATION SUBJECT TO CHANGE WITHOUT NOTICE

VERIFY REV LEVEL OF PAPER COPY WITH REV LEVEL ON PPC WEB SITE

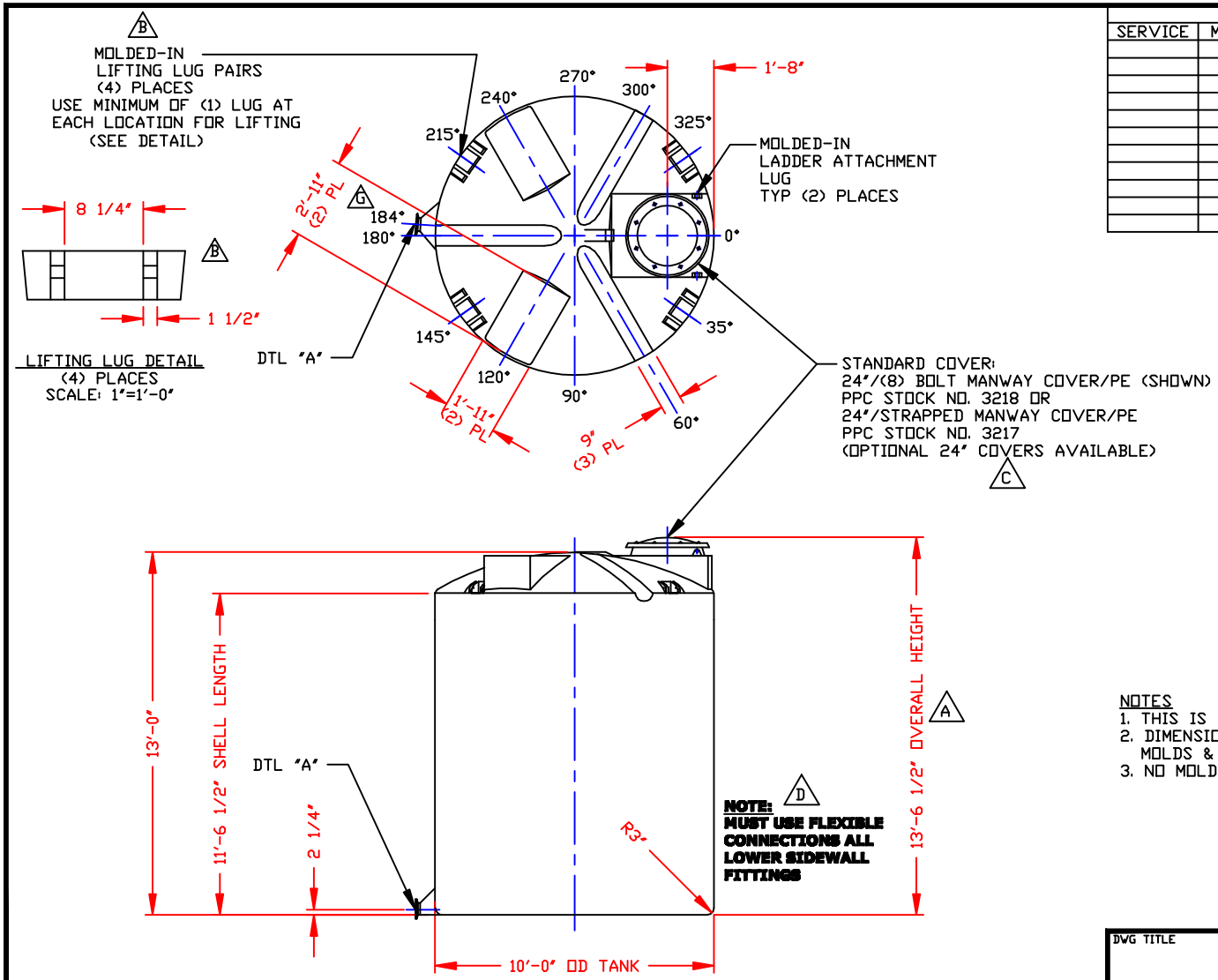

NOZZLE SCHEDULE & ACCESSORIES

SERVICE	MK	STOCK NO.	SIZE	FITTING	DEG	ELEV

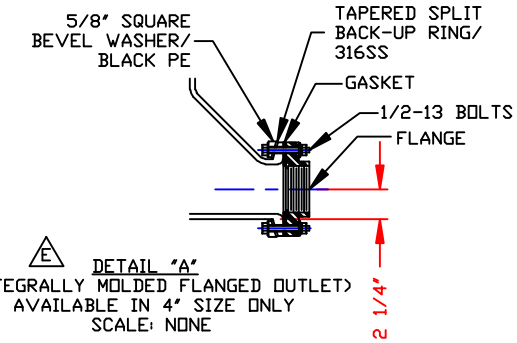

E

DETAIL "A"
(INTEGRALLY MOLDED FLANGED OUTLET)
AVAILABLE IN 4" SIZE ONLY
SCALE: NONE

NOTES
1. THIS IS A COMPUTER GENERATED DWG. DO NOT REVISE BY HAND.
2. DIMENSIONS WILL VARY ±3% DUE TO VARIATIONS IN MULTIPLE MOLDS & CONDITIONS PREVALENT DURING MANUFACTURE & USAGE.
3. NO MOLDED IN GALLONAGE MARKERS THIS TANK.

CALCULATED CAPACITIES/ VOLUME IN U.S. GALLONS		
DESIGN CAP	DOME VOL	TOTAL VOL
6628	265	6893

CONFIDENTIAL PROPERTY OF
POLY PROCESSING COMPANY
NOT FOR REPRINT OR USE
WITHOUT PERMISSION

REV	REVISED	BY	CK
G	IMFO LOCATION	JB 8/7/09	WM
F	FOR MOLD MODIFICATION	JB 6/16/05	WM
E	IMFO STYLE	JB 4/30/03	WM
D	ADDED FITTING NOTE	JB 2/27/03	MBW
C	STOCK NUMBER	JB 2/27/03	MBW
B	ADDED LIFTING LUGS & DETAIL	JB 10/31/02	WM
A	ADDED DIMENSION	JB 10/21/02	MBW

DWG TITLE: 6600 GALLON IMFO TANK

SCALE: 1/4"=1'-0"

DATE: 3/9/00

POLYPROCESSING COMPANY LLC

Western Region
P.O. Box 88
6955 South Ash Street
French Camp, CA 95231
(209) 982-4904
FAX (209) 982-0455

DR: MB WILKERSON

CK: D. RECTOR

SHEET	COMPUTER FILE	REV
1 OF 1	11106600	G

B-25