NON-CONTROLLED COPY

INFORMATION SUBJECT TO CHANGE WITHOUT NOTICE

VERIFY REV LEVEL OF PAPER COPY WITH REV LEVEL ON PPC WEB SITE

NOZZLE SCHEDULE & ACCESSORIES						
SERVICE	MK	STOCK NO.	SIZE	FITTING	DEG	ELEV

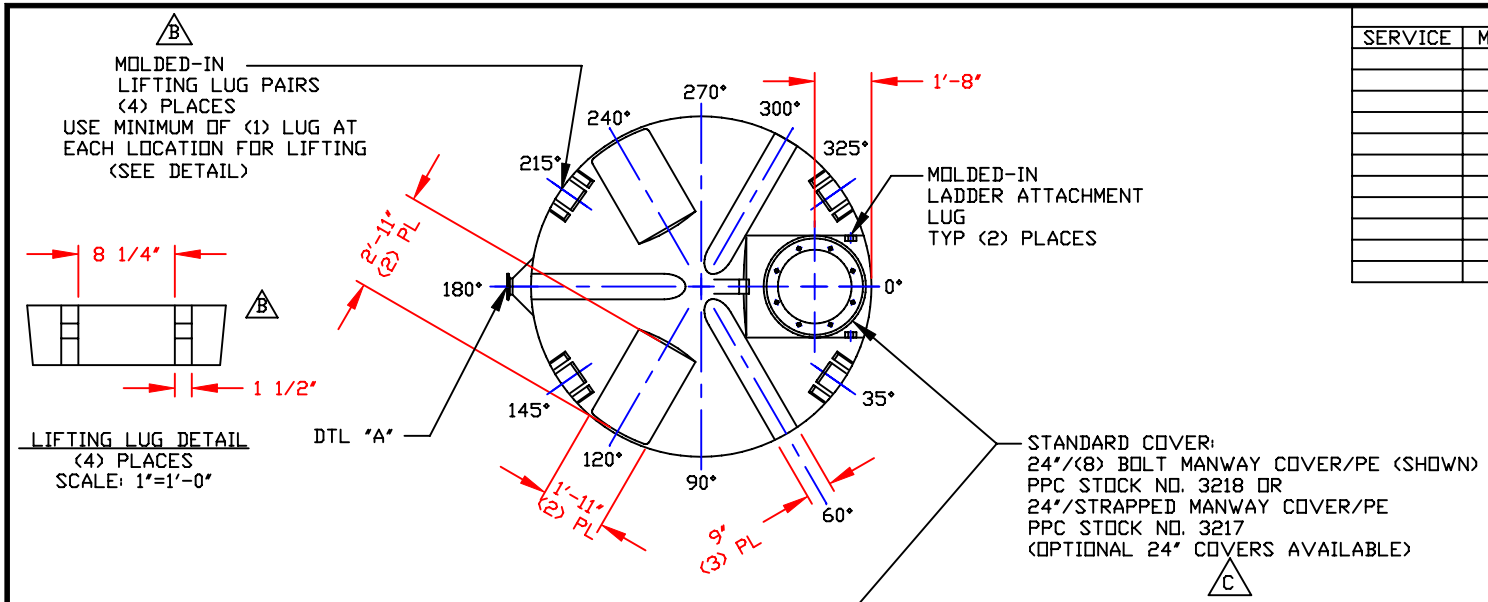

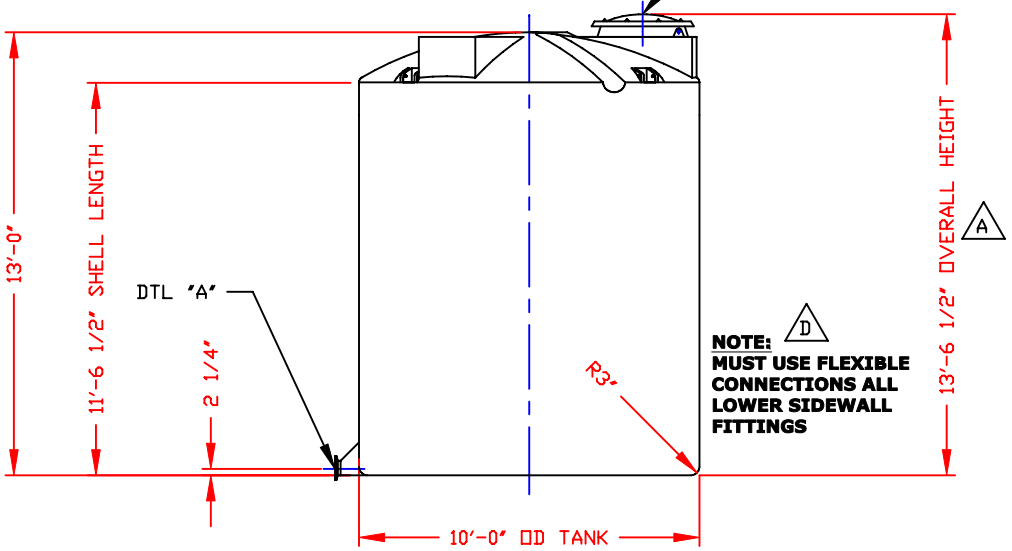

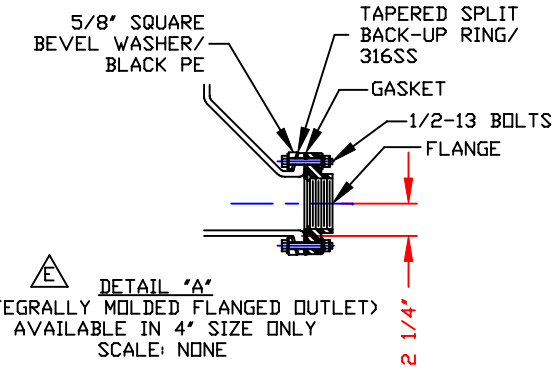

NOTES
1. THIS IS A COMPUTER GENERATED DWG. DO NOT REVISE BY HAND.
2. DIMENSIONS WILL VARY ±3% DUE TO VARIATIONS IN MULTIPLE MOLDS & CONDITIONS PREVALENT DURING MANUFACTURE & USAGE.
3. NO MOLDED IN GALLONAGE MARKERS THIS TANK.

CALCULATED CAPACITIES/ VOLUME IN U.S. GALLONS		
DESIGN CAP	DOME VOL	TOTAL VOL
6628	265	6893

CONFIDENTIAL PROPERTY OF POLY PROCESSING COMPANY NOT FOR REPRINT OR USE WITHOUT PERMISSION

DWG TITLE: 6600 GALLON IMFO TANK

SCALE: 1/4"=1'-0"

DATE: 3/9/00

POLYPROCESSING COMPANY
Western Region
P.O. Box 80
5090 South Ash Street
French Camp, CA 95231
(209) 982-4904
FAX (209) 982-0455

DR: MB WILKERSON

CK: D. RECTOR

SHEET: 1 OF 1

COMPUTER FILE: 11106600

REV: F

REV	REVISED FOR MOLD MODIFICATION	BY: JB	6/16/05	CK: WM
"E"	REVISED IMFO STYLE	BY: JB	4/30/03	CK: WM
"D"	ADDED FITTING NOTE	BY: JB	2/27/03	CK: MBW
"C"	REVISED STOCK NUMBER	BY: JB	2/27/03	CK: MBW
"B"	ADDED LIFTING LUGS & DETAIL	BY: JB	10/31/02	CK: WM
"A"	ADDED DIMENSION	BY: JB	10/21/02	CK: MBW

B-25