NON-CONTROLLED COPY

INFORMATION SUBJECT TO CHANGE WITHOUT NOTICE

VERIFY REV LEVEL OF PAPER COPY WITH REV LEVEL ON PPC WEB SITE

NOZZLE SCHEDULE & ACCESSORIES						
SERVICE	MK	STOCK NO.	SIZE	FITTING	DEG	ELEV

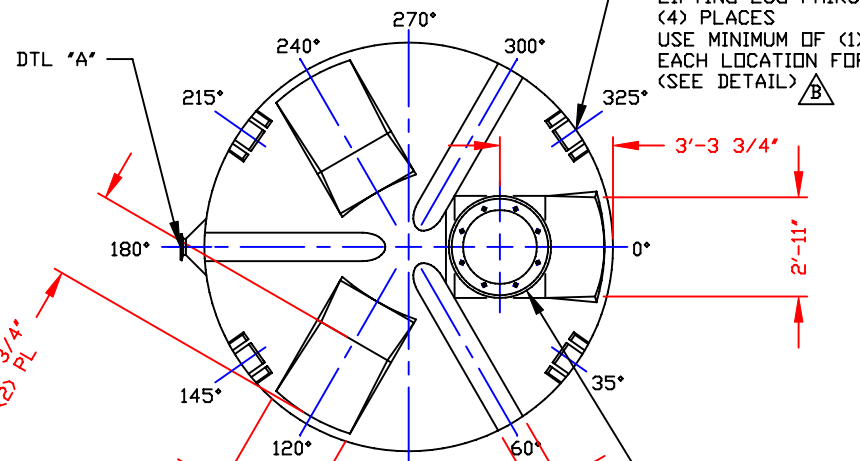

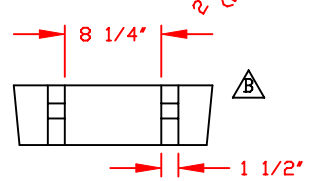

LIFTING LUG DETAIL
(4) PLACES
SCALE: 1"=1'-0"

STANDARD COVER: F
24"/(8) BOLT MANWAY COVER/PE (SHOWN)
STOCK NO. 3218 OR
24"/STRAPPED MANWAY COVER/PE
STOCK NO. 3217
(OPTIONAL 24" COVERS AVAILABLE)
C

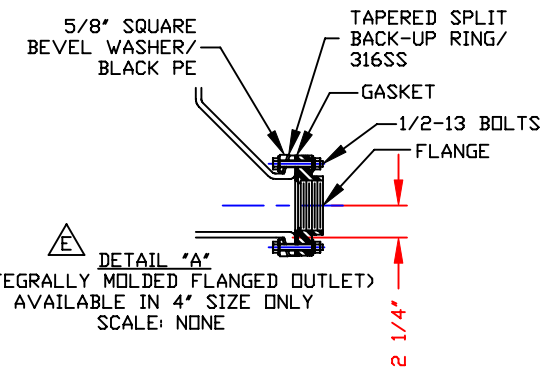

E DETAIL "A"
(INTEGRALLY MOLDED FLANGED OUTLET)
AVAILABLE IN 4" SIZE ONLY
SCALE: NONE

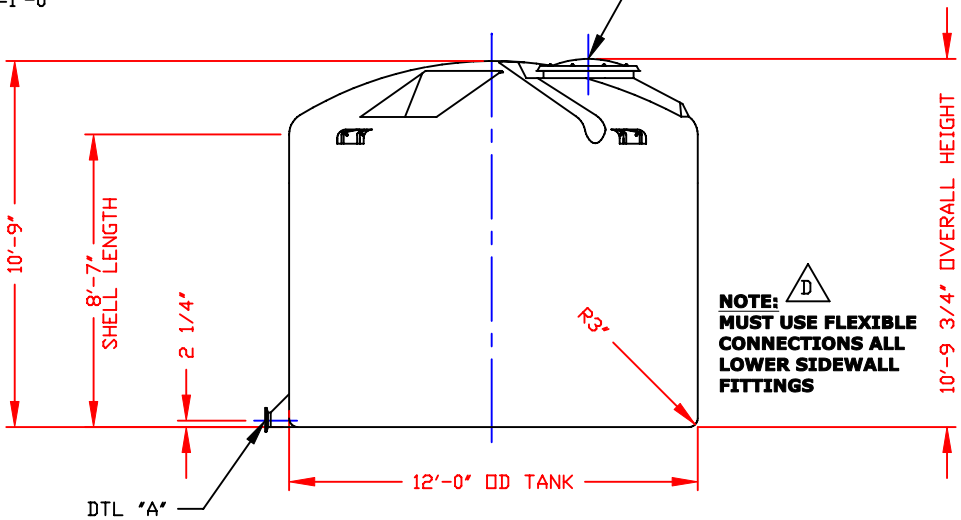

D
NOTE:
MUST USE FLEXIBLE CONNECTIONS ALL LOWER SIDEWALL FITTINGS

NOTES
1. THIS IS A COMPUTER GENERATED DWG. DO NOT REVISE BY HAND.
2. DIMENSIONS WILL VARY ±3% DUE TO VARIATIONS IN MULTIPLE MOLDS & CONDITIONS PREVALENT DURING MANUFACTURE & USAGE.
3. NO MOLDED IN GALLONAGE MARKERS THIS TANK.

CALCULATED CAPACITIES/ VOLUME IN U.S. GALLONS		
DESIGN CAP	DOME VOL	TOTAL VOL
7141	745	7886

CONFIDENTIAL PROPERTY OF POLY PROCESSING COMPANY NOT FOR REPRINT OR USE WITHOUT PERMISSION

REV	DESCRIPTION	BY	DATE	CK
"F"	REVISED MANWAY COVER	JB	5/9/06	WM
"E"	REVISED IMFO STYLE	JB	5/5/03	WM
"D"	ADDED FITTING NOTE	JB	2/27/03	MBW
"C"	REVISED STOCK NUMBER	JB	2/27/03	MBW
"B"	ADDED LIFTING LUGS & DETAIL	JB	10/30/02	WM
"A"	ADDED DIMENSION	JB	10/21/02	MBW

DWG TITLE: 7100 GALLON IMFO TANK

SCALE: 1/4"=1'-0"

DATE: 3/8/00

POLYPROCESSING COMPANY
Western Region
P.O. Box 80
8005 South Ash Street
French Camp, CA 95231
(209) 982-4904
FAX (209) 982-0455

DR: MB WILKERSON

CK: D. RECTOR

SHEET	COMPUTER FILE	REV
1 OF 1	11107100	F

B-25