NON-CONTROLLED COPY	COPY ISSUED BY_____.
INFORMATION SUBJECT TO CHANGE WITHOUT NOTICE	
COPY WILL NOT BE UPDATED	COPY ISSUED ON_____.

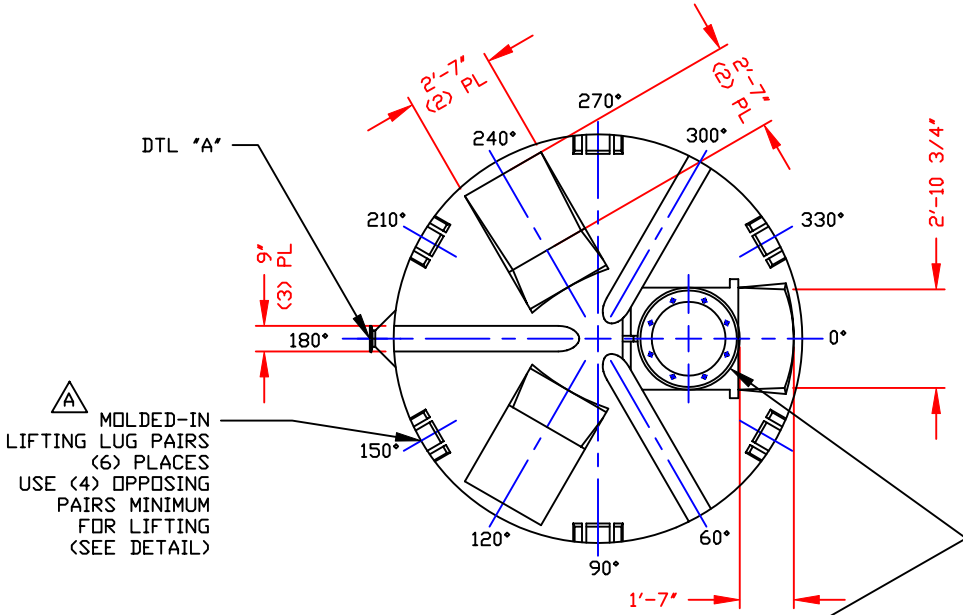

A MOLDED-IN LIFTING LUG PAIRS (6) PLACES USE (4) OPPOSING PAIRS MINIMUM FOR LIFTING (SEE DETAIL)

D STANDARD COVER:
24"/(8) BOLTS MANWAY COVER/PE (SHOWN)
STOCK NO. 3218 OR
24"/STRAPPED MANWAY COVER/PE
STOCK NO. 3217
(OPTIONAL 24" COVERS AVAILABLE)

NOZZLE SCHEDULE & ACCESSORIES						
SERVICE	MK	STOCK NO.	SIZE	FITTING	DEG	ELEV

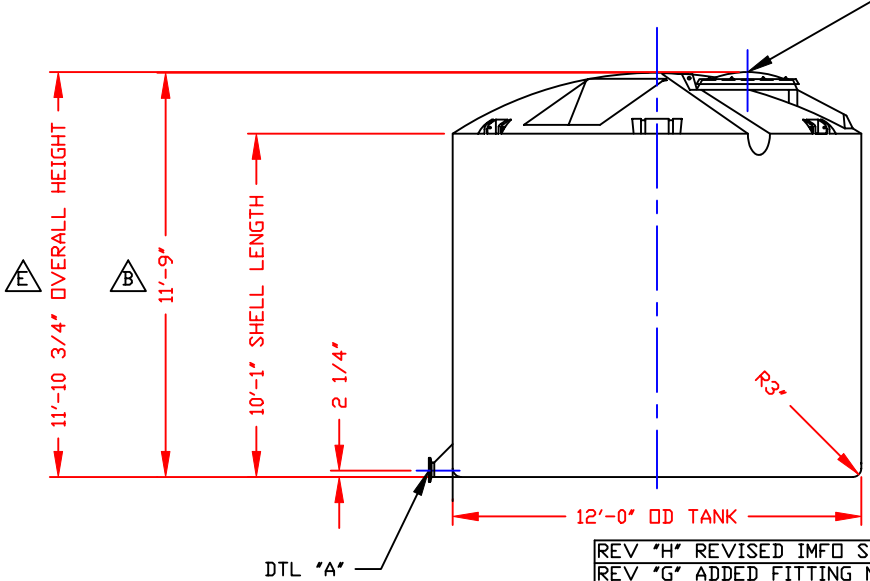

NOTE: G MUST USE FLEXIBLE CONNECTIONS ALL LOWER SIDEWALL FITTINGS

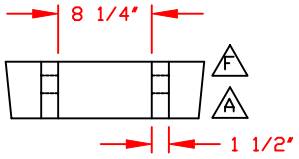

LIFTING LUG DETAIL
(6) PLACES
SCALE: 1"=1'-0"

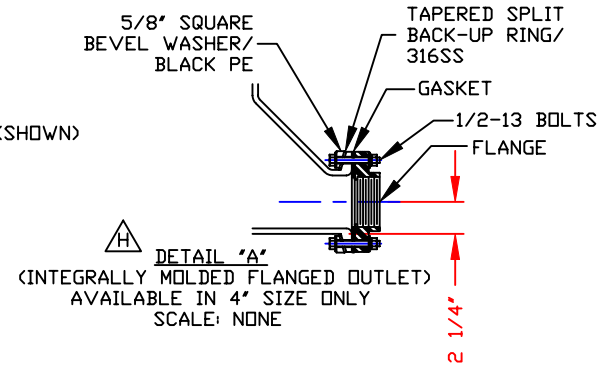

H DETAIL "A"
(INTEGRALLY MOLDED FLANGED OUTLET)
AVAILABLE IN 4" SIZE ONLY
SCALE: NONE

NOTES
1. THIS IS A COMPUTER GENERATED DWG. DO NOT REVISE BY HAND.
2. DIMENSIONS WILL VARY ±3% DUE TO VARIATIONS IN MULTIPLE MOLDS & CONDITIONS PREVALENT DURING MANUFACTURE & USAGE.
3. NO MOLDED IN GALLONAGE MARKERS THIS TANK.

C

CALCULATED CAPACITIES/ VOLUME IN U.S. GALLONS		
DESIGN CAP	DOME VOL	TOTAL VOL
8363	640	9003

CONFIDENTIAL PROPERTY OF POLY PROCESSING COMPANY NOT FOR REPRINT OR USE WITHOUT PERMISSION

REV	
"H"	REVISED IMFO STYLE BY:JB 2/14/03 CK:MBW
"G"	ADDED FITTING NOTE BY:JB 2/14/03 CK:MBW
"F"	REVISED LIFTING LUG DETAIL BY:JB 1/14/03 CK:WM
"E"	ADDED DIMENSION BY:JB 10/21/02 CK:MBW
"D"	REVISED DOME & MWY CONFIGURATION BY:MBW 8/28/02 CK:JB
"C"	REVISED CALCULATED CAPACITY BY:JB 3/28/02 CK:MBW
"B"	DID SAY 11'-10 1/2" BY:JB 3/28/02 CK:MBW
"A"	ADDED LIFTING LUGS & DETAIL BY:JB 3/25/02 CK:MBW

DWG TITLE: 8350 GALLON IMFO TANK

SCALE: 1/4"=1'-0"
DATE: 3/9/00

POLY PROCESSING Company
Western Region
P.O. Box 80
8055 South Ash Street
French Camp, CA 95231
(209) 982-4904
FAX (209) 982-0455

DR: MB WILKERSON
CK: D. RECTOR

SHEET	COMPUTER FILE	REV
1 OF 1	11108350	H

B-25