NON-CONTROLLED COPY

INFORMATION SUBJECT TO CHANGE WITHOUT NOTICE

VERIFY REV LEVEL OF PAPER COPY WITH REV LEVEL ON PPC WEB SITE

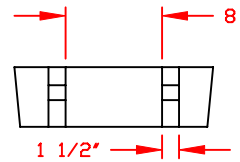

LIFTING LUG DETAIL
(6) PLACES
SCALE: 1"=1'-0"

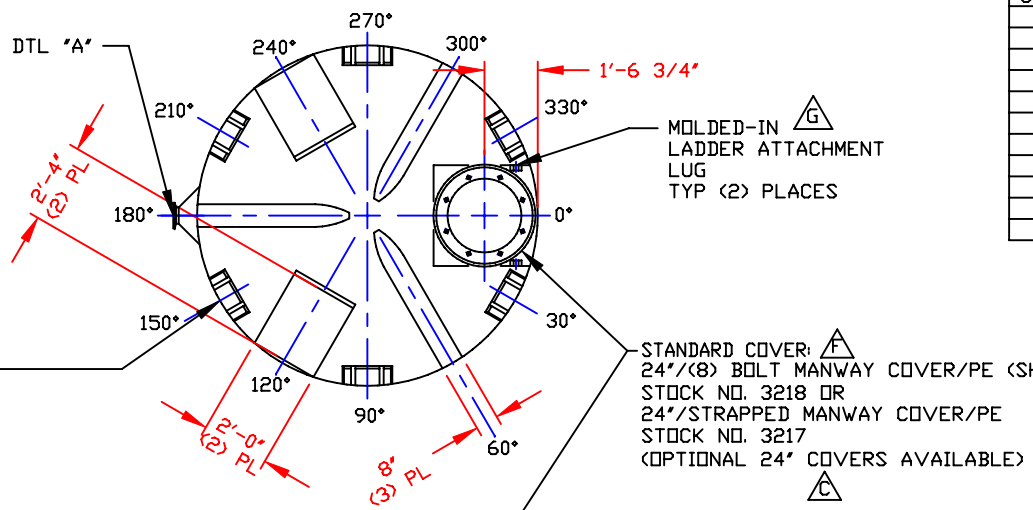

NOZZLE SCHEDULE & ACCESSORIES

SERVICE	MK	STOCK NO.	SIZE	FITTING	DEG	ELEV

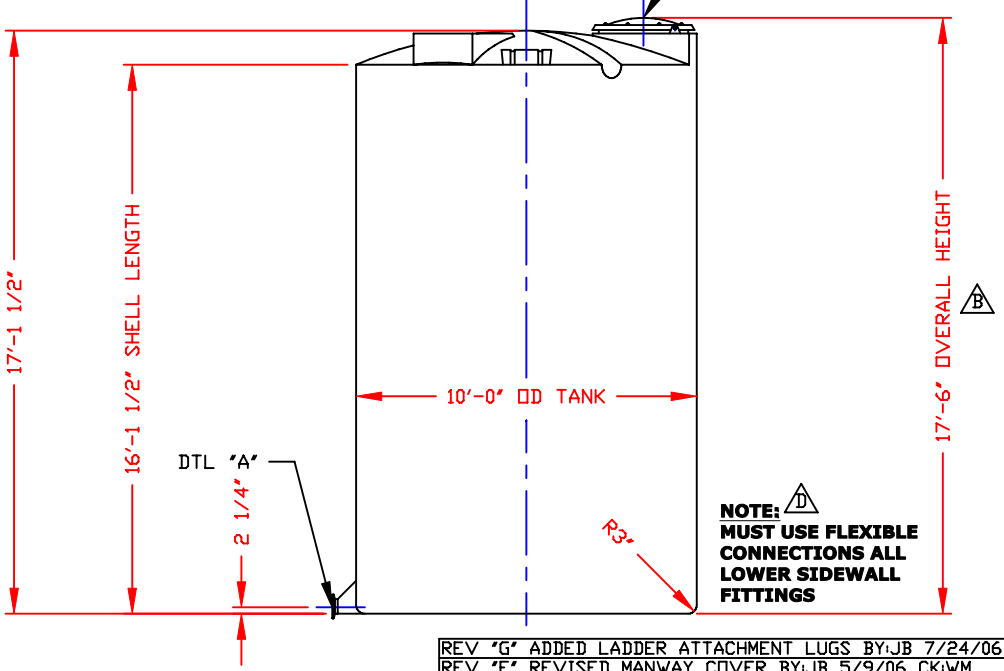

NOTE:
MUST USE FLEXIBLE CONNECTIONS ALL LOWER SIDEWALL FITTINGS

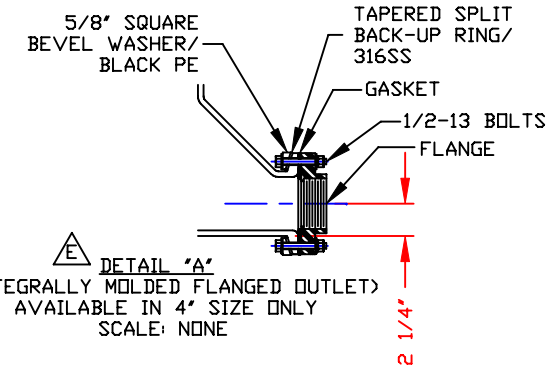

DETAIL "A"
(INTEGRALLY MOLDED FLANGED OUTLET)
AVAILABLE IN 4" SIZE ONLY
SCALE: NONE

NOTES
1. THIS IS COMPUTER GENERATED DWG. DO NOT REVISE BY HAND.
2. DIMENSIONS WILL VARY ±3% DUE TO VARIATIONS IN MULTIPLE MOLDS & CONDITIONS PREVALENT DURING MANUFACTURE & USAGE.
3. NO MOLDED IN GALLONAGE MARKERS THIS TANK.

CALCULATED CAPACITIES/ VOLUME IN U.S. GALLONS		
DESIGN CAP	DOME VOL	TOTAL VOL
9179	250	9429

CONFIDENTIAL PROPERTY OF POLY PROCESSING COMPANY NOT FOR REPRINT OR USE WITHOUT PERMISSION

DWG TITLE: 9150 GALLON IMFO TANK

SCALE: 1/4"=1'-0"

DATE: 3/9/00

POLYPROCESSING COMPANY
Western Region
P.O. Box 88
6995 South Ash Street
French Camp, CA 95231
(209) 982-4904
FAX (209) 982-0455

DR: MB WILKERSON

CK: D. RECTOR

SHEET: 1 OF 1

COMPUTER FILE: 11109150

REV: G

REV "G" ADDED LADDER ATTACHMENT LUGS BY:JB 7/24/06 CK:WM
REV "F" REVISED MANWAY COVER BY:JB 5/9/06 CK:WM
REV "E" REVISED IMFO STYLE BY:JB 4/30/03 CK:WM
REV "D" ADDED FITTING NOTE BY:JB 2/28/03 CK:MBW
REV "C" REVISED STOCK NUMBER BY:JB 2/28/03 CK:MBW
REV "B" ADDED DIMENSION BY:JB 10/22/02 CK:MBW
REV "A" ADDED LIFTING LUGS & DETAIL BY:JB 8/27/02 CK:WM

B-25