NON-CONTROLLED COPY

INFORMATION SUBJECT TO CHANGE WITHOUT NOTICE

VERIFY REV LEVEL OF PAPER COPY WITH REV LEVEL ON PPC WEB SITE

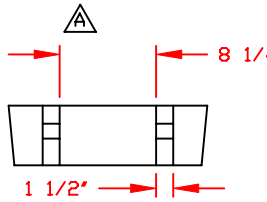

LIFTING LUG DETAIL
(6) PLACES
SCALE: 1"=1'-0"

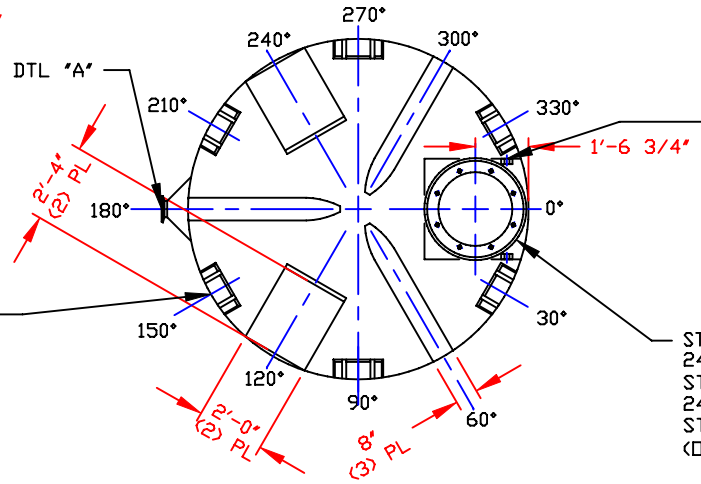

MOLDED-IN LADDER ATTACHMENT LUG TYP (2) PLACES F

MOLDED-IN LIFTING LUG PAIRS (6) PLACES A
USE (3) OPPOSING PAIRS MINIMUM FOR LIFTING (SEE DETAIL)

STANDARD COVER: E
24"/(8) BOLT MANWAY COVER/PE (SHOWN)
STOCK NO. 3218 OR
24"/STRAPPED MANWAY COVER/PE
STOCK NO. 3217
(OPTIONAL 24" COVERS AVAILABLE)
B

NOZZLE SCHEDULE & ACCESSORIES

SERVICE	MK	STOCK NO.	SIZE	FITTING	DEG	ELEV

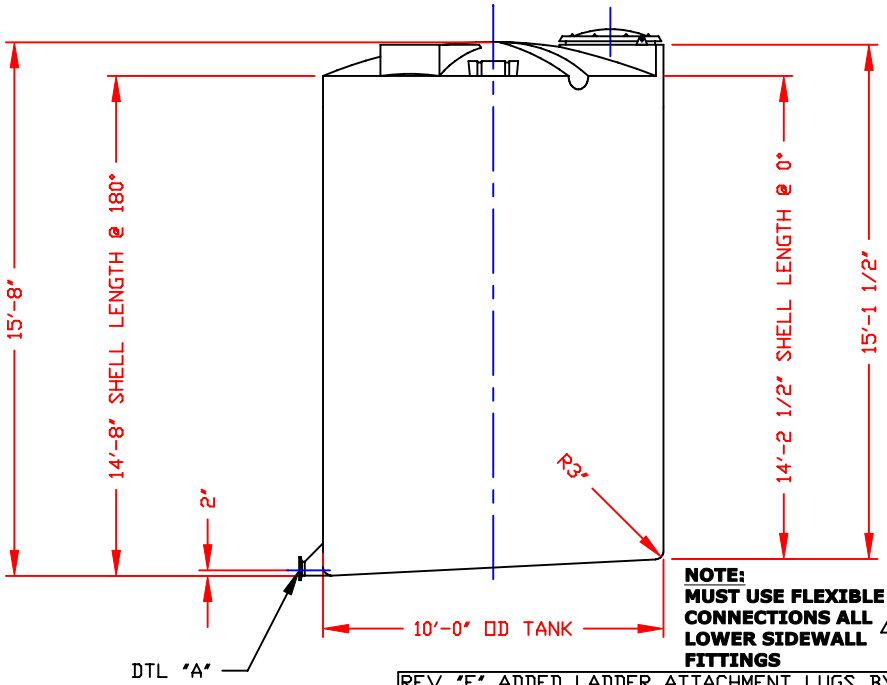

NOTE:
MUST USE FLEXIBLE CONNECTIONS ALL LOWER SIDEWALL FITTINGS C

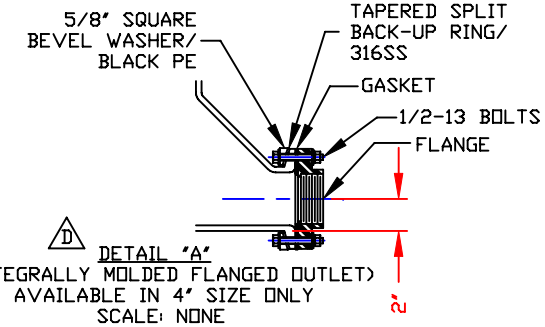

D DETAIL "A"
(INTEGRALLY MOLDED FLANGED OUTLET)
AVAILABLE IN 4" SIZE ONLY
SCALE: NONE

NOTES
1. THIS IS A COMPUTER GENERATED DWG. DO NOT REVISE BY HAND.
2. DIMENSIONS WILL VARY ±3% DUE TO VARIATIONS IN MULTIPLE MOLDS & CONDITIONS PREVALENT DURING MANUFACTURE & USAGE.
3. NO MOLDED IN GALLONAGE MARKERS THIS TANK.

CALCULATED CAPACITIES/ VOLUME IN U.S. GALLONS

DESIGN CAP	DOME VOL	TOTAL VOL
8238	250	8488

CONFIDENTIAL PROPERTY OF POLY PROCESSING COMPANY NOT FOR REPRINT OR USE WITHOUT PERMISSION

REV	
REV "F"	ADDED LADDER ATTACHMENT LUGS BY:JB 7/21/06 CK:WM
REV "E"	REVISED MANWAY COVER BY:JB 5/10/06 CK:WM
REV "D"	REVISED IMFO STYLE BY:JB 4/30/03 CK:WM
REV "C"	ADDED FITTING NOTE BY:JB 3/3/032 CK:MBW
REV "B"	REVISED STOCK NUMBER BY:JB 3/3/032 CK:MBW
REV "A"	ADDED LIFTING LUGS & DETAIL BY:JB 8/27/02 CK:WM

DWG TITLE: 8200 GALLON SLOPE BOTTOM IMFO TANK

SCALE: 1/4"=1'-0"
DATE: 3/20/00

POLYPROCESSING COMPANY
Western Region
P.O. Box 80
8055 South Ash Street
French Camp, CA 95231
(209) 982-4904
FAX (209) 982-0455

DR: MB WILKERSON
CK: D. RECTOR

SHEET: 1 OF 1
COMPUTER FILE: 11208200
REV: F

8-25