NON-CONTROLLED COPY	COPY ISSUED BY_____.
INFORMATION SUBJECT TO CHANGE WITHOUT NOTICE	
COPY WILL NOT BE UPDATED	COPY ISSUED ON_____.

REV "A" ADDED LIFTING LUGS & DETAIL BY:JB 4/1/02 CK:WM
REV "B" DID SAY 16-5 1/2" BY:JB 4/1/02 CK:MBW
REV "C" REVISED CALCULATED CAPACITY BY:JB 4/1/02 CK:MBW
REV "D" REVISED LIFTING LUG DETAIL BY:JB 1/14/03 CK:WM
REV "E" REVISED DOME & M/Y CONFIGURATION BY:JB 1/14/03 CK:WM
REV "F" ADDED FITTING NOTE BY:JB 2/13/03 CK:MBW
REV "G" REVISED IMFO STYLE BY:JB 4/30/03 CK:WM

NOZZLE SCHEDULE & ACCESSORIES

SERVICE	MK	STOCK NO.	SIZE	FITTING	DEG	ELEV

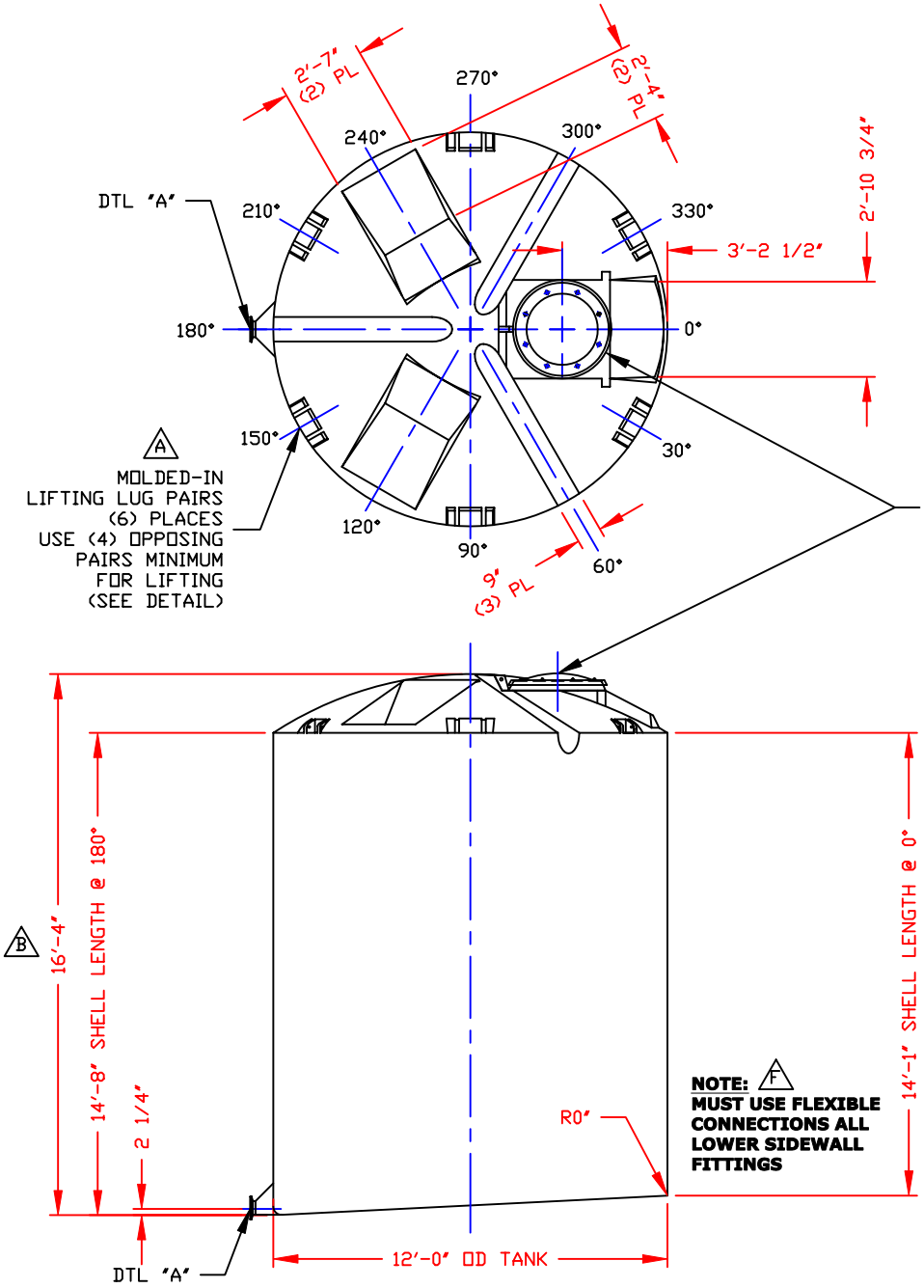

E

STANDARD COVER:
24"/(8) BOLTS MANWAY COVER/PE (SHOWN)
STOCK NO. 3218 OR
24"/STRAPPED MANWAY COVER/PE
STOCK NO. 3217
(OPTIONAL 24" COVERS AVAILABLE)

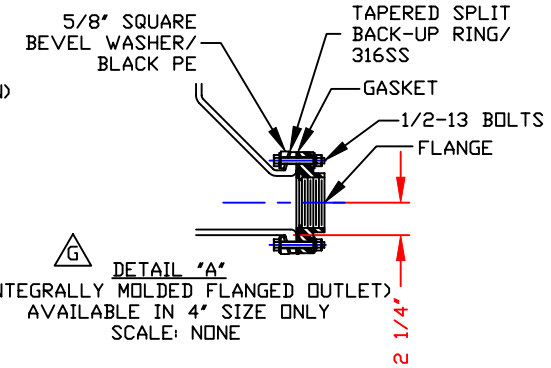

G

DETAIL "A"
(INTEGRALLY MOLDED FLANGED OUTLET)
AVAILABLE IN 4" SIZE ONLY
SCALE: NONE

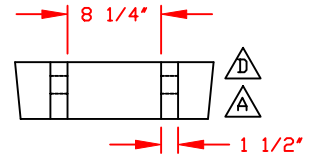

LIFTING LUG DETAIL
(6) PLACES
SCALE: 1"=1'-0"

C

CALCULATED CAPACITIES/ VOLUME IN U.S. GALLONS		
DESIGN CAP	DOME VOL	TOTAL VOL
11814	640	12454

NOTE: F
MUST USE FLEXIBLE CONNECTIONS ALL LOWER SIDEWALL FITTINGS

CONFIDENTIAL PROPERTY OF POLY PROCESSING COMPANY NOT FOR REPRINT OR USE WITHOUT PERMISSION

DWG TITLE
11800 GALLON UPRIGHT SLOPE BOTTOM IMFO TANK

SCALE: 1/4"=1'-0"
DATE: 1/3/01

POLY PROCESSING Company
Western Region
P.O. Box 80
8055 South Ash Street
French Camp, CA 95231
(209) 982-4904
FAX (209) 982-0455

DR: MB WILKERSON
CK: J. BRANTLEY

SHEET	COMPUTER FILE	REV
1 OF 1	11211800	G

B-25