NON-CONTROLLED COPY	COPY ISSUED BY_____.
INFORMATION SUBJECT TO CHANGE WITHOUT NOTICE	
COPY WILL NOT BE UPDATED	COPY ISSUED ON_____.

NOZZLE SCHEDULE & ACCESSORIES						
SERVICE	MK	STOCK NO.	SIZE	FITTING	DEG	ELEV

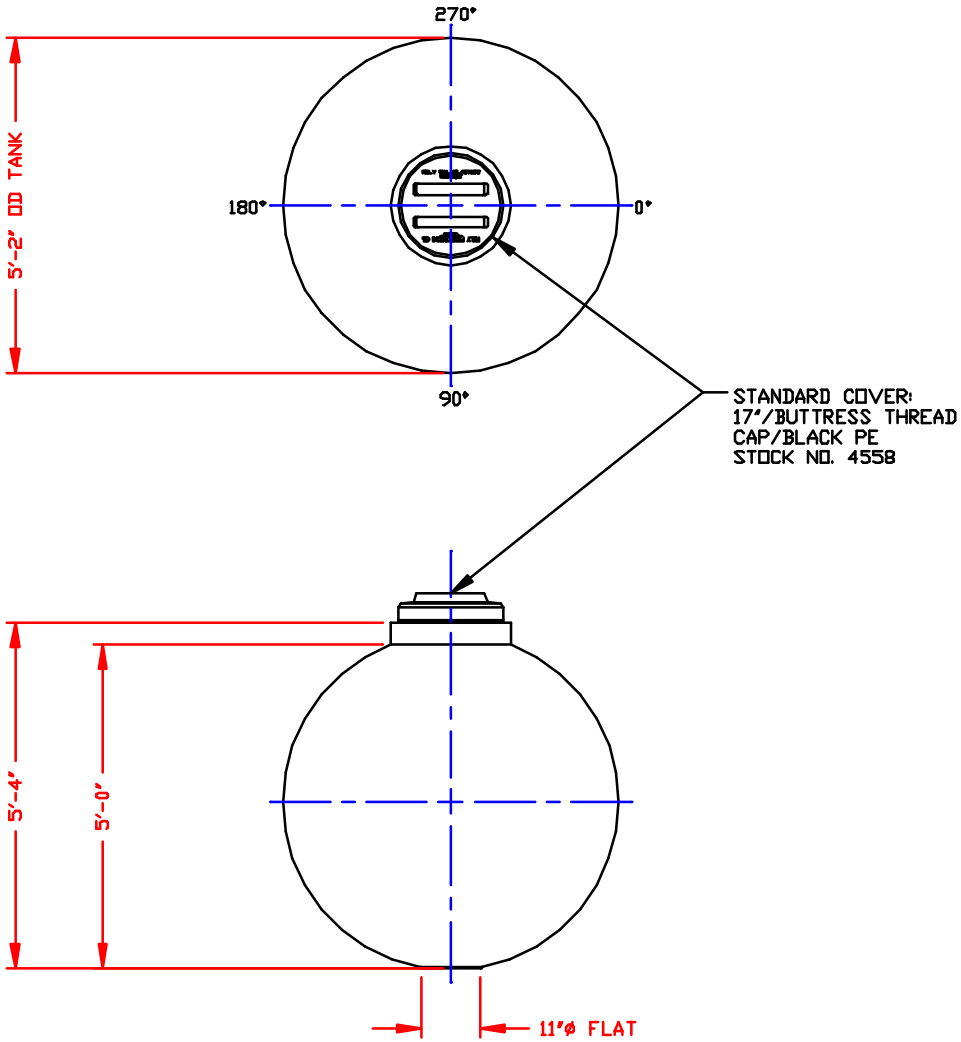

NOTES
1. THIS IS A COMPUTER GENERATED DWG. DO NOT REVISE BY HAND.
2. DIMENSIONS WILL VARY ±3% DUE TO VARIATIONS IN MULTIPLE MOLDS & CONDITIONS PREVALENT DURING MANUFACTURE & USAGE.
3. NO GALLONAGE MARKERS THIS TANK.

CALCULATED CAPACITY VOLUME IN U.S. GALLONS
DESIGN CAPACITY
530

CONFIDENTIAL PROPERTY OF POLY PROCESSING COMPANY NOT FOR REPRINT OR USE WITHOUT PERMISSION

DWG TITLE: 530 GALLON POLYSPHERE TANK

SCALE: 1/2"=1'-0"
DATE: 6/27/00

POLY PROCESSING Company

Wilmington Plastics
P.O. Box 69
2503 South Ash Street
Franklin Park, PA 16323
(800) 345-2564
FAX (800) 992-3400

DR: MB WILKERSON
CK: J. BRANTLEY

SHEET	COMPUTER FILE	REV
1 OF 1	16000530	-