NON-CONTROLLED COPY	COPY ISSUED BY_____.
INFORMATION SUBJECT TO CHANGE WITHOUT NOTICE	
COPY WILL NOT BE UPDATED	COPY ISSUED ON_____.

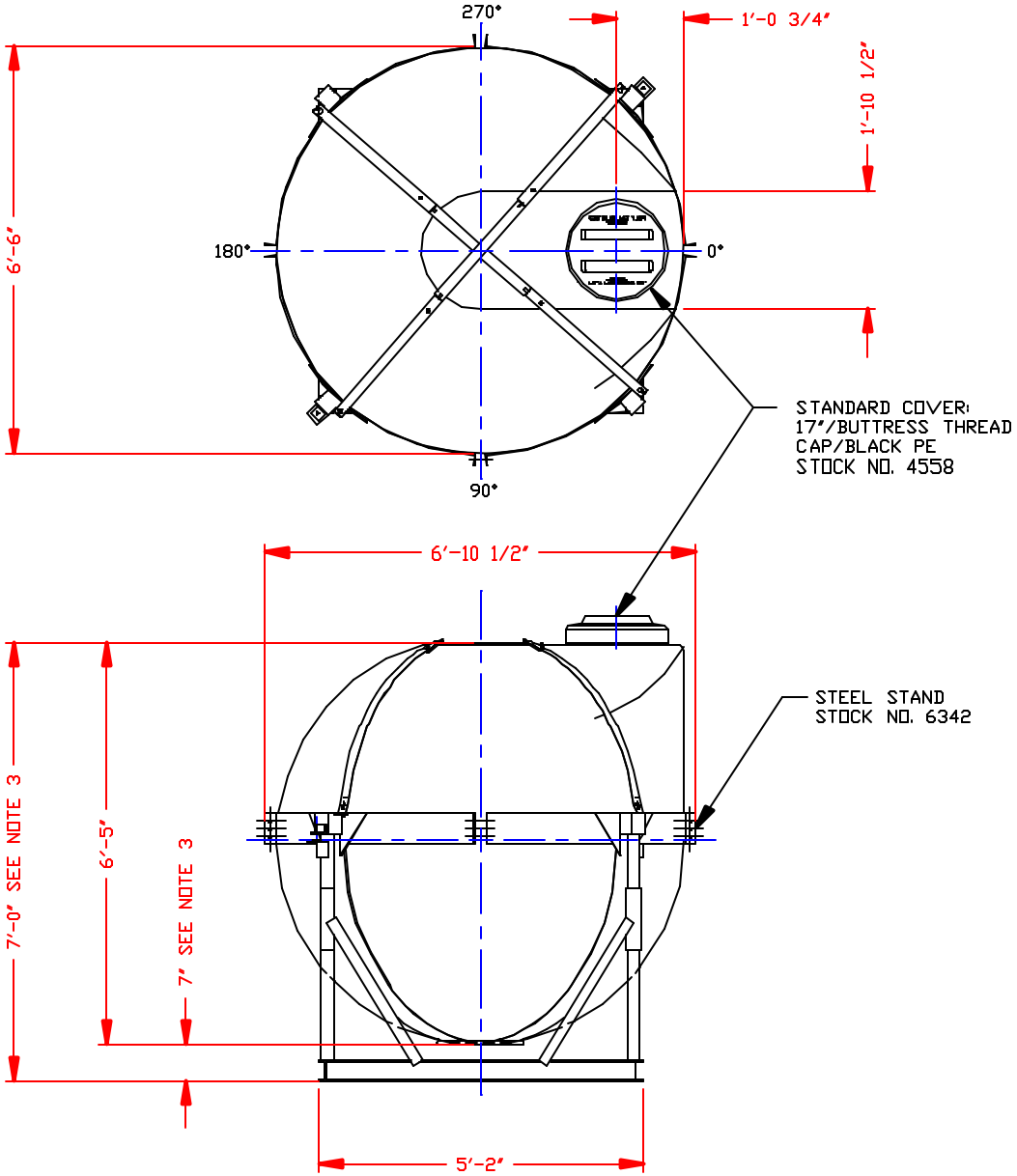

NOZZLE SCHEDULE & ACCESSORIES

SERVICE	MK	STOCK NO.	SIZE	FITTING	DEG	ELEV

NOTES
1. THIS IS A COMPUTER GENERATED DWG. DO NOT REVISE BY HAND.
2. DIMENSIONS WILL VARY ±3% DUE TO VARIATIONS IN MULTIPLE MOLDS & CONDITIONS PREVALENT DURING MANUFACTURE & USAGE.
3. WHEN FILLED, TANK MAY SETTLE IN STAND CAUSING VARIATIONS IN BOTTOM CLEARANCE & OVERALL HEIGHT DIMENSIONS.
4. NO GALLONAGE MARKERS THIS TANK.

CALCULATED CAPACITY VOLUME IN U.S. GALLONS
DESIGN CAPACITY
1080

CONFIDENTIAL PROPERTY OF POLY PROCESSING COMPANY NOT FOR REPRINT OR USE WITHOUT PERMISSION

DWG TITLE: 1080 GALLON POLYSPHERE TANK W/STEEL STAND

SCALE: 1/2"=1'-0"

DATE: 2/19/02

POLY PROCESSING COMPANY

Western Region
P.O. Box 80
8800 South Main Street
Fresno County, CA 93600
(559) 365-4294
FAX (559) 365-6455

DR: MB WILKERSON

CK: J. BRANTLEY

SHEET	COMPUTER FILE	REV
1 OF 1	16001080S	-