NON-CONTROLLED COPY	COPY ISSUED BY_____.
INFORMATION SUBJECT TO CHANGE WITHOUT NOTICE	
COPY WILL NOT BE UPDATED	COPY ISSUED ON_____.

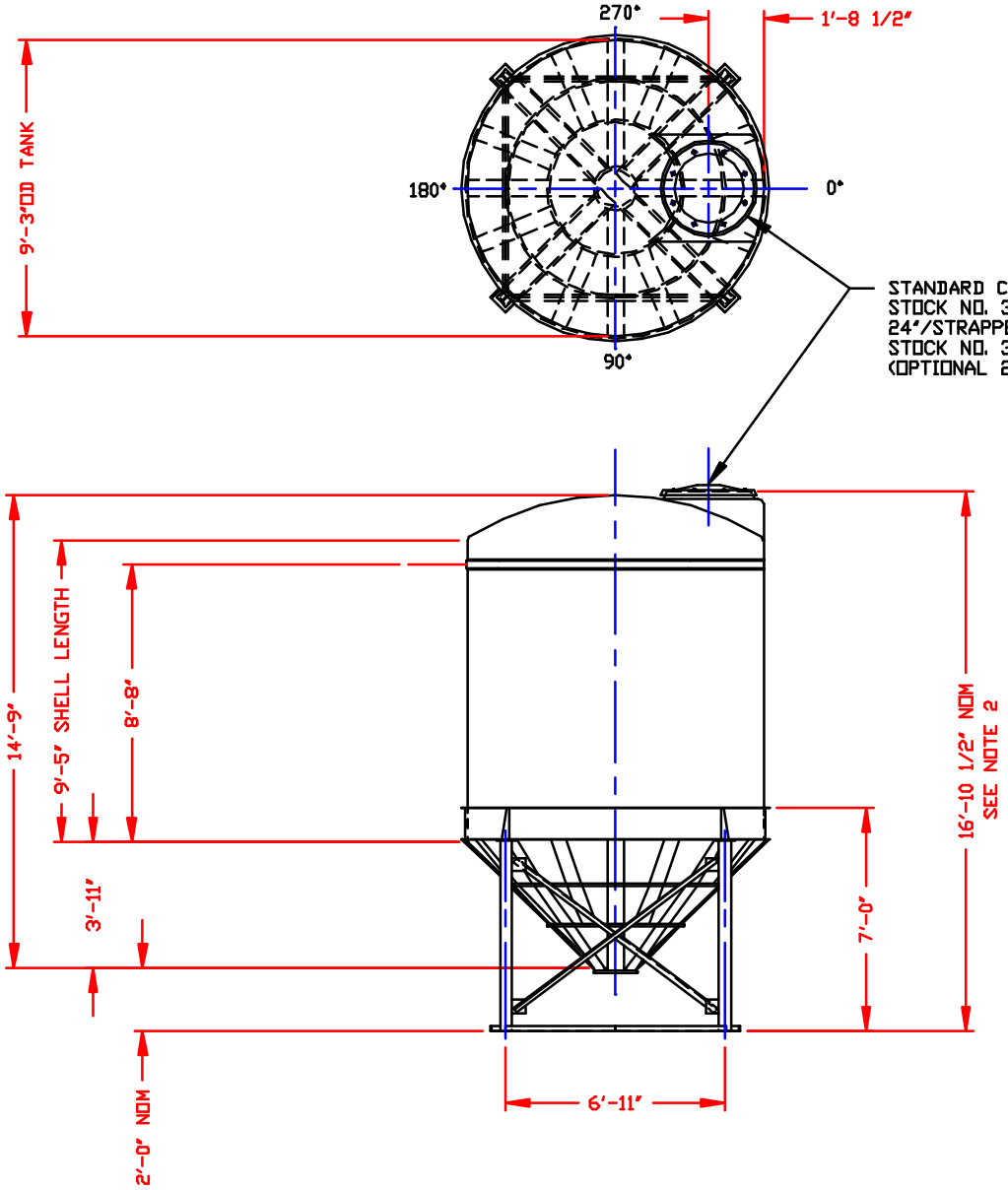

NOZZLE SCHEDULE & ACCESSORIES

SERVICE	MK	STOCK NO.	SIZE	FITTING	DEG	ELEV

NOTES

1. THIS IS A COMPUTER GENERATED DWG. DO NOT REVISE BY HAND.
2. DIMENSIONS WILL VARY ±3% DUE TO VARIATIONS IN MULTIPLE MOLDS & CONDITIONS PREVALENT DURING MANUFACTURE & USAGE. WHEN FILLED, TANK MAY SETTLE IN STAND CAUSING VARIATIONS IN BOTTOM CLEARANCE & OVERALL HEIGHT DIM.
3. 5" WIDE MOLDED IN GALLONAGE MARKERS @ APPROX 5" UP TO 4800 GAL. AVOID WHEN PLACING FITTINGS.

CALCULATED CAPACITIES/ VOLUME: IN U.S. GALLONS

DESIGN CAP	DOME VOL	TOTAL VOL
5379	315	5694

CONFIDENTIAL PROPERTY OF POLY PROCESSING COMPANY NOT FOR REPRINT OR USE WITHOUT PERMISSION

DWG TITLE: 5350 GALLON 45° CONE BOTTOM TANK W/STAND

SCALE: 1/4"-1'-0"

DATE: 2/2/00

POLY PROCESSING Company

DR: MB WILKERSON

CK: D. RECTOR

SHEET	COMPUTER FILE	REV
1 OF 1	4005350S	-