NON-CONTROLLED COPY INFORMATION SUBJECT TO CHANGE WITHOUT NOTICE COPY WILL NOT BE UPDATED	COPY ISSUED BY_____. COPY ISSUED ON_____.

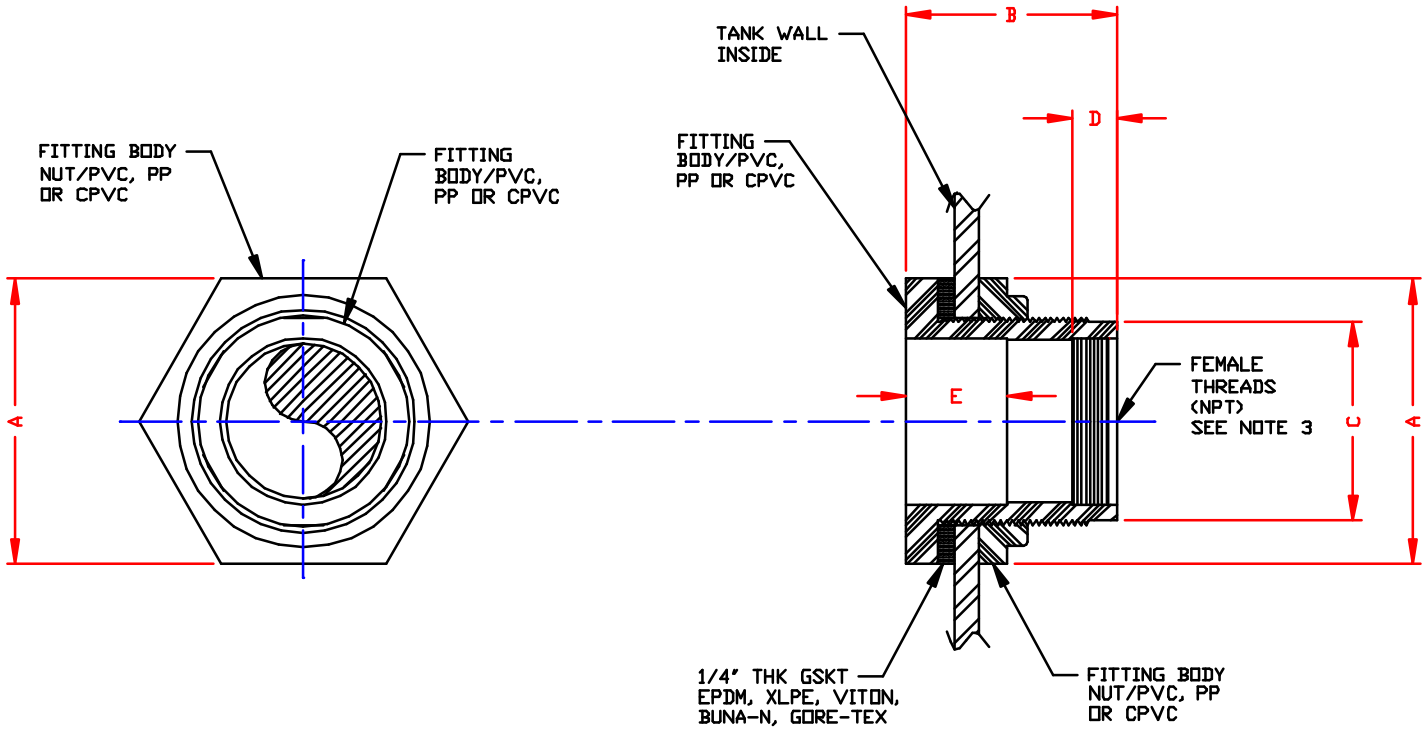

PIPE SIZE (NPT)	DIM A	DIM B	DIM C	DIM D	DIM E
1/2"	2"	2 3/4"	1 3/8"	3/4"	7/8"
3/4"	2 3/8"	2 7/8"	1 5/8"	3/4"	1"
1"	2 9/16"	2 7/8"	1 7/8"	1 3/16"	1 1/8"
1 1/4"	3"	3"	2 3/8"	3/4"	1 1/4"
1 1/2"	3"	3"	2 3/8"	13/16"	1 7/16"
2"	4 3/8"	3 1/4"	3 1/4"	15/16"	1 9/16"
3"	6"	3 5/8"	4 1/2"	1 1/16"	1 7/8"
4"	8 3/4"	4 3/4"	5 3/4"	1 1/2"	1 1/2"

NOTES
1. THIS IS A COMPUTER GENERATED DWG. DO NOT REVISE BY HAND.
2. PLASTIC BULKHEAD FITTINGS (EXCEPT 4") MAY BE USED ON THE TANK SIDE WALL, IN THE BOTTOM, OR ON THE CENTER OF THE DOME. PLASTIC BULKHEAD FITTINGS MAY ALSO BE USED ELSEWHERE ON THE DOME IF IT IS NOT NECESSARY THAT THE FITTING BE VERTICAL TO THE BASE OF THE TANK AS THE FITTING WILL FOLLOW THE CURVE OF THE DOME.
3. PVC FITTING MAY BE SPECIAL ORDERED WITH THREADS ON BOTH ENDS. PP IS THREADED ON BOTH ENDS. CPVC IS S X T ONLY.
4. 3" AND 4" FITTINGS ARE OCTAGONAL.

CONFIDENTIAL PROPERTY OF POLY PROCESSING COMPANY NOT FOR REPRINT OR USE WITHOUT PERMISSION

DWG TITLE: PLASTIC BULKHEAD FITTING (HAYWARD)

SCALE: 6"=1'-0"
DATE: 8/30/00

POLY PROCESSING Company

DR: MB WILKERSON
CK: J. BRANTLEY

SHEET: 1 OF 1
COMPUTER FILE: BHF
REV: -