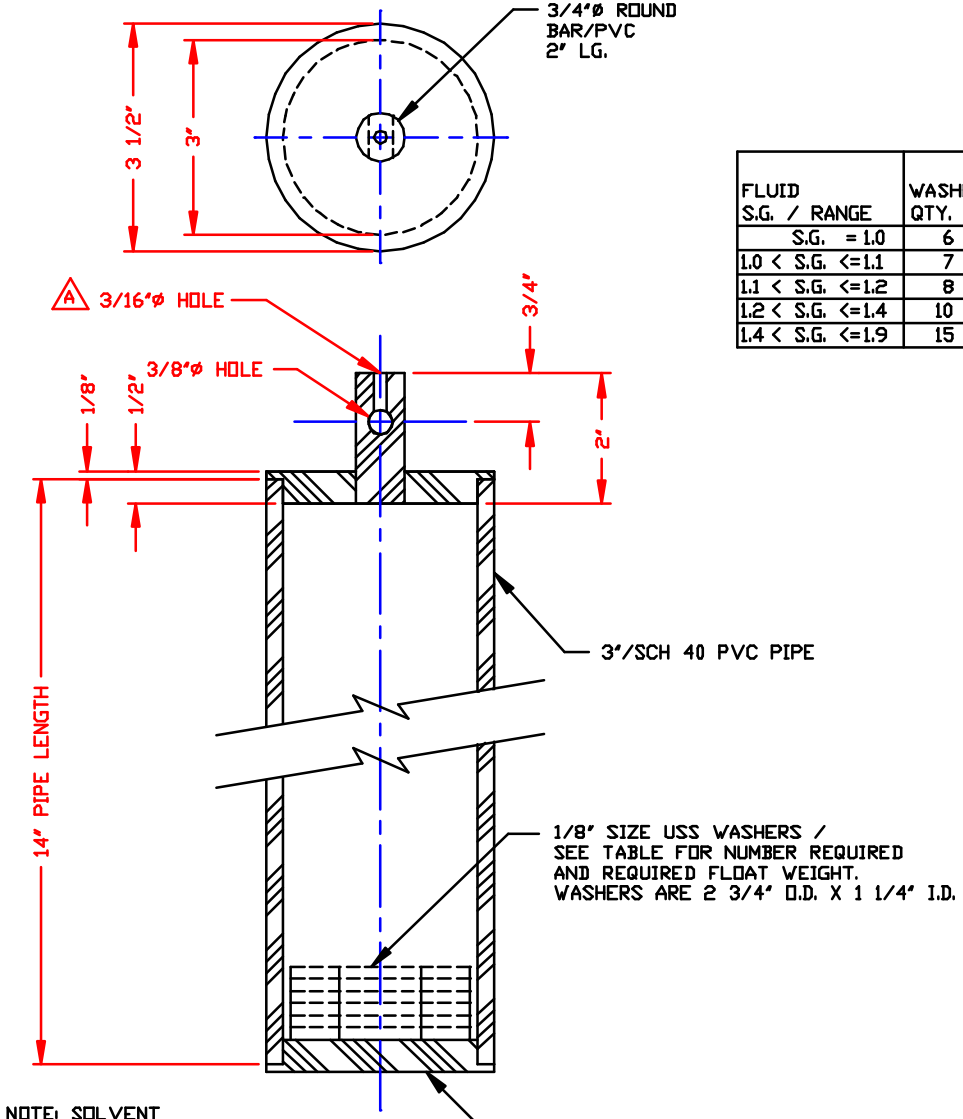

FLOAT
(1) REQ'D.

FLUID S.G. / RANGE	WASHER QTY.	FLOAT WEIGHT LB.	FLOAT WEIGHT OZ.
S.G. = 1.0	6	3	5.33
1.0 < S.G. <=1.1	7	3	8.85
1.1 < S.G. <=1.2	8	3	12.37
1.2 < S.G. <=1.4	10	4	3.41
1.4 < S.G. <=1.9	15	5	5.01

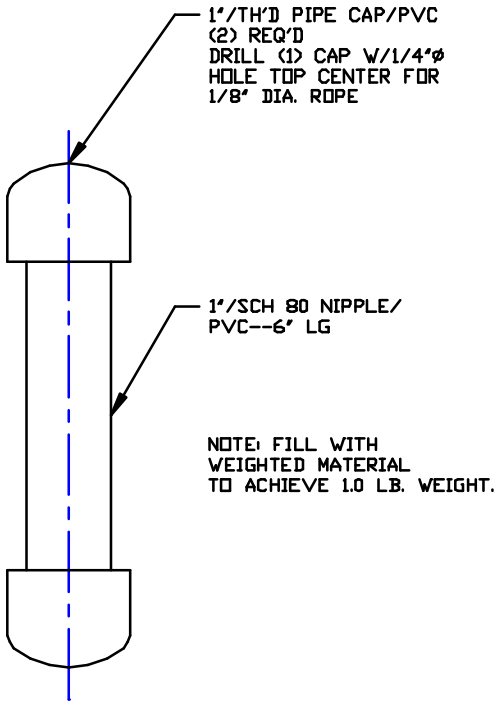

LEVEL INDICATOR
(1) REQ'D

NOTES
1. THIS IS A COMPUTER GENERATED DWG. DO NOT REVISE BY HAND.
2. COMPUTER DRAWING NAME "FTSGA,"=SHEET 1, "FTSGB,"=SHEET 2, "FTSGC,"=SHEET 3.
3. THIS DRAWING REPLACES DRAWING NO. PPC071585-1, TITLE, "FLOAT TYPE SIGHT GAGE."

REV. "D" PPC STOCK NOS. ADDED (3) PL SHT 1 BY:D.R. 7-29-98 CK:W.T.
REV. "C" PROMO TANK PIPE SUPPT DTL 3/8" THK PLATE BRACKET REV & REDRAWN BY:D.R. 7-29-98 CK:W.T.
REV. "B" REVISED AND REDRAWN BY:K.K. 9-26-97 CK:D.R./W.T.
REV. "A" 3/16"Ø HOLE ADDED TO FLOAT BY:D.R. 9-10-96 CK:E.T./W.T.

DWG. TITLE: FLOAT TYPE SIGHT GAGE

SCALE: 6"=1'-0"
DATE: 4-11-96

POLY PROCESSING CO.

DR. D. RECTOR
CK. E.T./W.T.

SHEET: 3 OF 3
DWG. NO. PPC041196-1
REV. D