NON-CONTROLLED COPY	COPY ISSUED BY_____.
INFORMATION SUBJECT TO CHANGE WITHOUT NOTICE	
COPY WILL NOT BE UPDATED	COPY ISSUED ON_____.

NOZZLE SCHEDULE & ACCESSORIES						
SERVICE	MK	STOCK NO.	SIZE	FITTING	DEG	ELEV

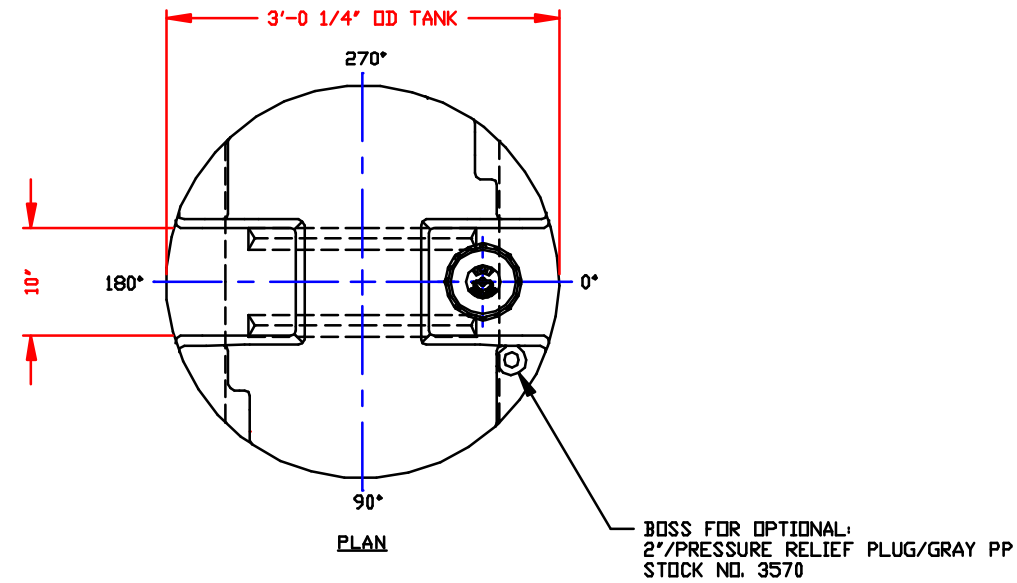

PLAN

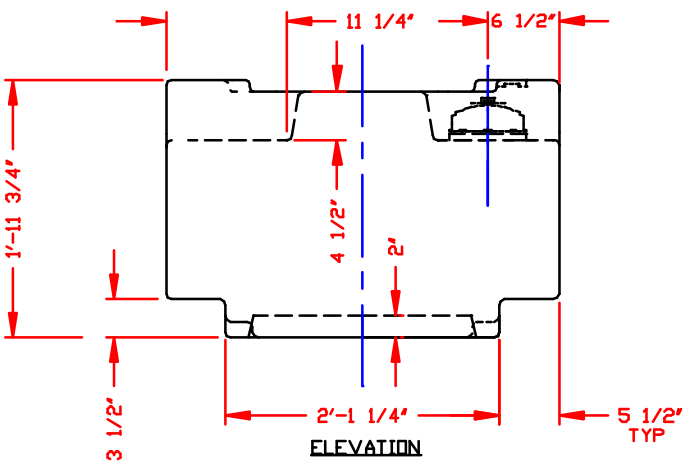

ELEVATION

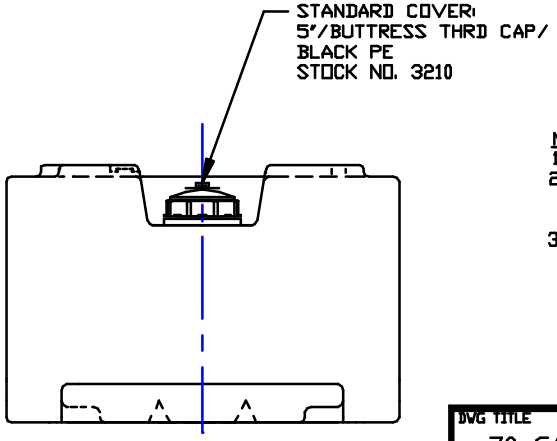

FRONT

NOTES
1. COMPUTER GENERATED DWG. DO NOT REVISE BY HAND.
2. DIMENSIONS WILL VARY ±3% DUE TO VARIATIONS IN MULTIPLE MOLDS & CONDITIONS PREVALENT DURING MANUFACTURE & USAGE.
3. NO GALLONAGE MARKERS THIS TANK.

CALCULATED CAPACITIES/ VOLUME IN U.S. GALLONS
DESIGN CAPACITY
74

CONFIDENTIAL PROPERTY OF POLY PROCESSING COMPANY NOT FOR REPRINT OR USE WITHOUT PERMISSION

DWG TITLE: 70 GALLON TRANSPORTABLE CYLINDRICAL TANK

SCALE: 1"=1'-0"
DATE: 2/14/00

POLY PROCESSING Company

DR: MB WILKERSON
CK: D. RECTOR

SHEET	COMPUTER FILE	REV
1 OF 1	7000070	-