NON-CONTROLLED COPY	COPY ISSUED BY_____.
INFORMATION SUBJECT TO CHANGE WITHOUT NOTICE	
COPY WILL NOT BE UPDATED	COPY ISSUED ON_____.

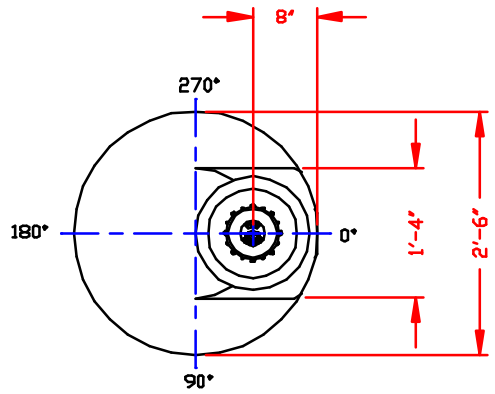

TOP VIEW

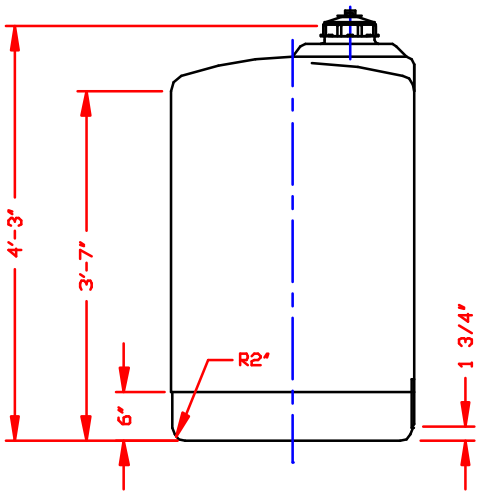

ELEVATION VIEW

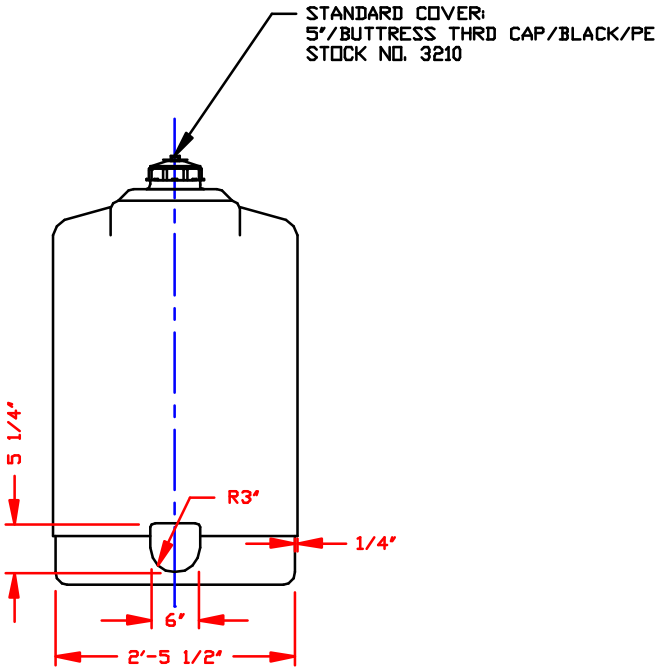

FRONT VIEW

NOZZLE SCHEDULE & ACCESSORIES

SERVICE	MK	STOCK NO.	SIZE	FITTING	DEG	ELEV

NOTE
1. COMPUTER GENERATED DWG. DO NOT REVISE BY HAND.
2. DIMENSIONS WILL VARY ±3% DUE TO VARIATIONS IN MULTIPLE MOLDS & CONDITIONS PREVALENT DURING MANUFACTURE & USAGE.
3. MOLDED IN GALLONAGE MARKERS @ 0° IN 25 GAL INCREMENTS UP TO 100 GALLONS.
4. FOR ASSEMBLY DTLS SEE COMPUTER FILE NO. 7000125A. FOR PALLET DTLS SEE COMPUTER FILE NO. 7200125.

CALCULATED CAPACITIES/ VOLUME IN U.S. GALLONS		
DESIGN CAP	DOME VOL	TOTAL VOL
126	10	136

CONFIDENTIAL PROPERTY OF POLY PROCESSING COMPANY NOT FOR REPRINT OR USE WITHOUT PERMISSION

DWG TITLE: 125 GALLON CYLINDRICAL TRANSPORTABLE TANK

SCALE: 3/4"=1'-0"
DATE: 2/14/00

POLY PROCESSING Company

DR: MB WILKERSON
CK: D. RECTOR

SHEET	COMPUTER FILE	REV
1 OF 1	7000125	-