NON-CONTROLLED COPY	COPY ISSUED BY_____.
INFORMATION SUBJECT TO CHANGE WITHOUT NOTICE	
COPY WILL NOT BE UPDATED	COPY ISSUED ON_____.

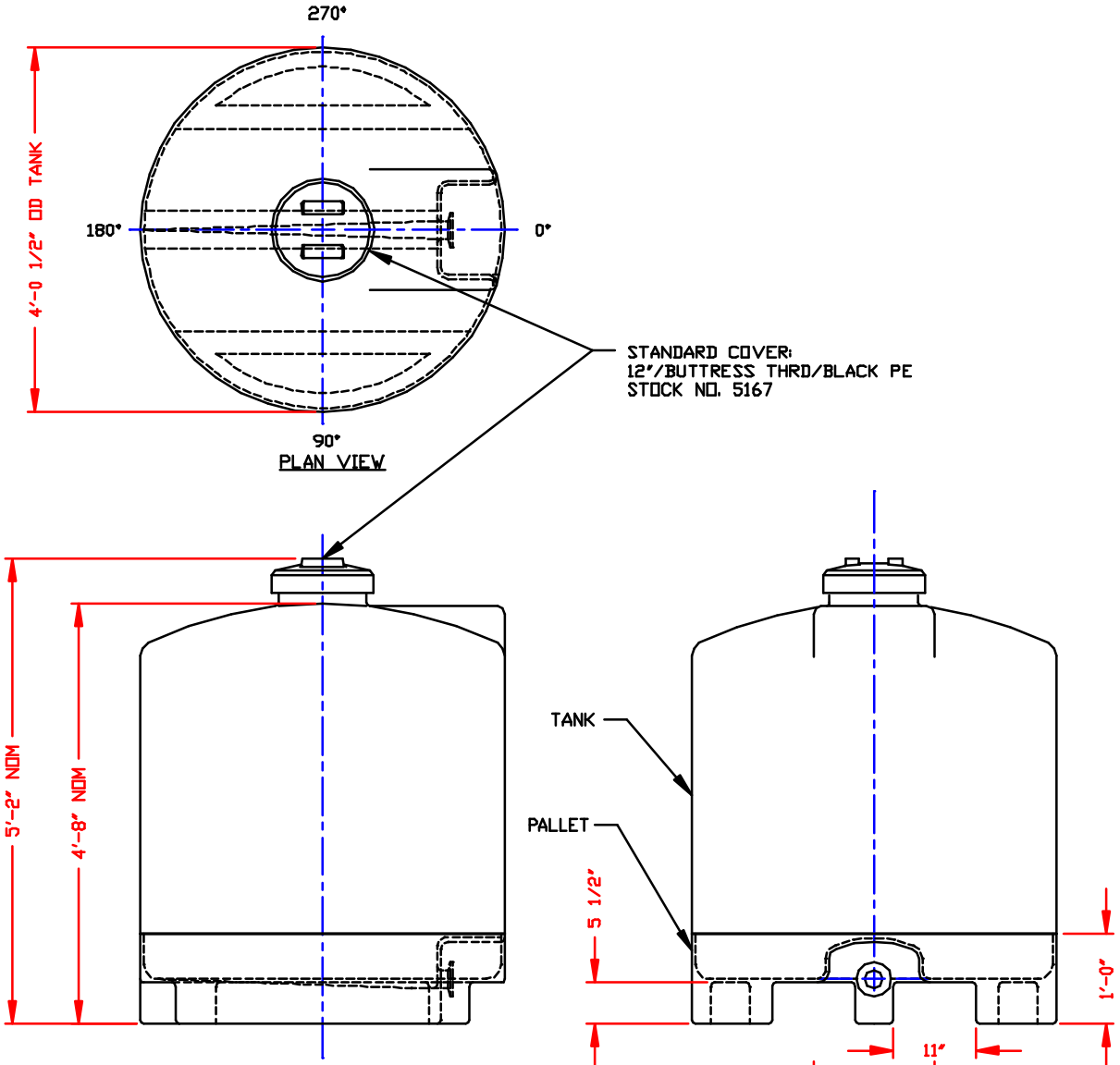

NOZZLE SCHEDULE & ACCESSORIES

SERVICE	MK	STOCK NO.	SIZE	FITTING	DEG	ELEV

NOTE

1. COMPUTER GENERATED DWG. DO NOT REVISE BY HAND.
2. DIMENSIONS WILL VARY ±3% DUE TO VARIATIONS IN MULTIPLE MOLDS & CONDITIONS PREVALENT DURING MANUFACTURE & USAGE.
3. MOLDED IN GALLONAGE MARKERS @ 0° IN 25 GAL INCREMENTS STARTING @ 75 GALLONS UP TO 275 GALLONS.
4. FOR TANK DTLS SEE COMPUTER FILE NO. 7000325.
   FOR PALLET DTLS SEE COMPUTER FILE NO. 7200325.

CALCULATED CAPACITIES/ VOLUME IN U.S. GALLONS		
SHELL CAP	DOME VOL	TOTAL VOL
329	26	359

CONFIDENTIAL PROPERTY OF POLY PROCESSING COMPANY NOT FOR REPRINT OR USE WITHOUT PERMISSION

DWG TITLE: 325 GALLON CYLINDRICAL TRANSPORTABLE TANK W/IMFO & PALLET ASSEMBLY

SCALE: 3/4"=1'-0"

DATE: 2/14/00

POLY PROCESSING COMPANY

DR: MB WILKERSON

CK: D. RECTOR

SHEET	COMPUTER FILE	REV
1 OF 1	7000325A	-