NON-CONTROLLED COPY	COPY ISSUED BY_____.
INFORMATION SUBJECT TO CHANGE WITHOUT NOTICE	
COPY WILL NOT BE UPDATED	COPY ISSUED ON_____.

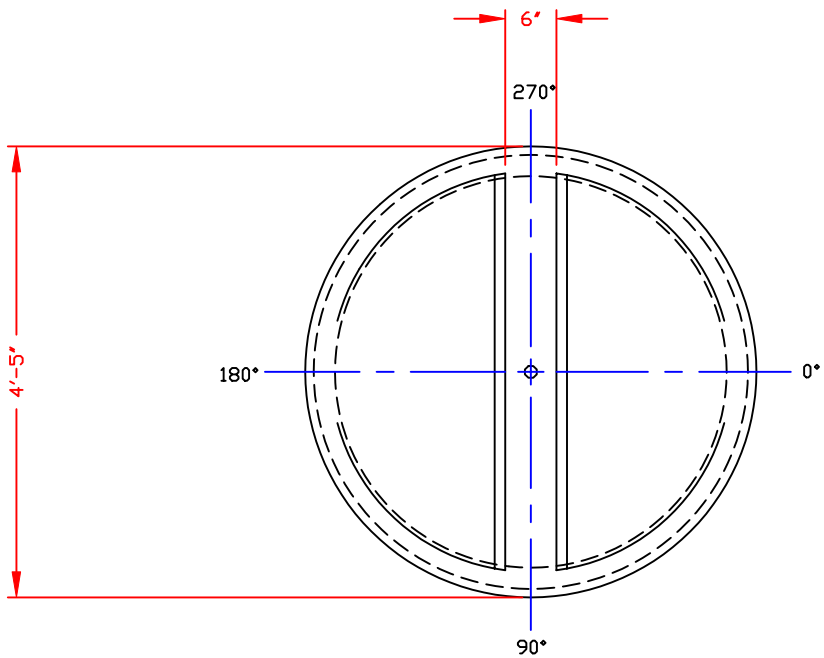

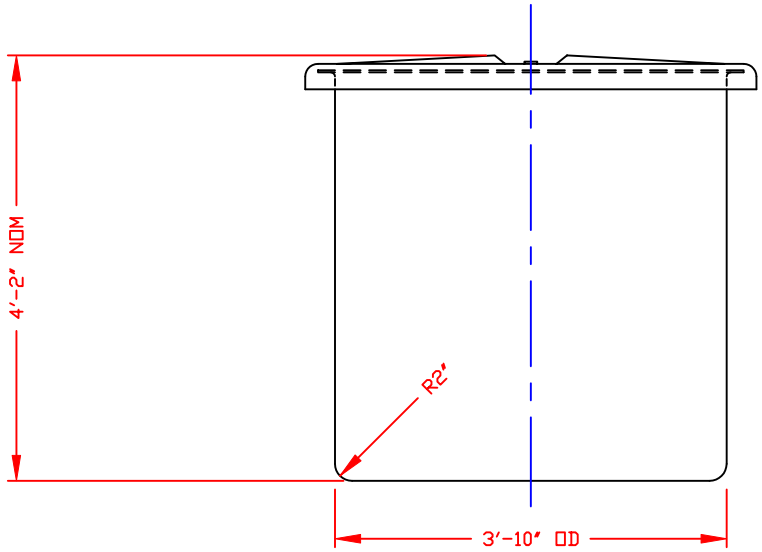

NOTE: (A)
MUST USE FLEXIBLE CONNECTIONS ALL LOWER SIDEWALL FITTINGS

NOZZLE SCHEDULE & ACCESSORIES

SERVICE	MK	STOCK NO.	SIZE	FITTING	DEG	ELEV

NOTES
1. THIS IS A COMPUTER GENERATED DWG. DO NOT REVISE BY HAND.
2. DIMENSIONS WILL VARY ±3% DUE TO VARIATIONS IN MULTIPLE MOLDS & CONDITIONS PREVALENT DURING MANUFACTURE & USAGE.
3. MOLDED IN GALLONAGE MARKERS IN 50 GAL INCREMENTS UP TO TO 300 GAL.
4. DRILL & TAP LID ℄-℄ FOR 1"/PIPE PLUG/PVC TO PLUG BREATHER STEM HOLE. NOT NECESSARY IF HINGE IS USED.

CALCULATED CAPACITY VOLUME IN U.S. GALLONS
DESIGN CAPACITY
333

CONFIDENTIAL PROPERTY OF POLY PROCESSING COMPANY NOT FOR REPRINT OR USE WITHOUT PERMISSION

DWG TITLE: 330 GALLON OPEN TOP TANK W/COVER

SCALE: 3/4"=1'-0"
DATE: 12/22/99

POLY PROCESSING Company
Central Region
P.O. Box 4150 (71211)
2201 Old Sterlington Rd.
Monroe, LA 71203
(318) 343-7565
FAX (318) 343-8795

DR: MB WILKERSON
CK: J. BRANTLEY

SHEET	COMPUTER FILE	REV
1 OF 1	1500330C	A

REV "A" ADDED FITTING NOTE BY:MBW 4/14/03 CK:JB

B-75