NON-CONTROLLED COPY

INFORMATION SUBJECT TO CHANGE WITHOUT NOTICE

VERIFY REV LEVEL OF PAPER COPY WITH REV LEVEL ON PPC WEB SITE

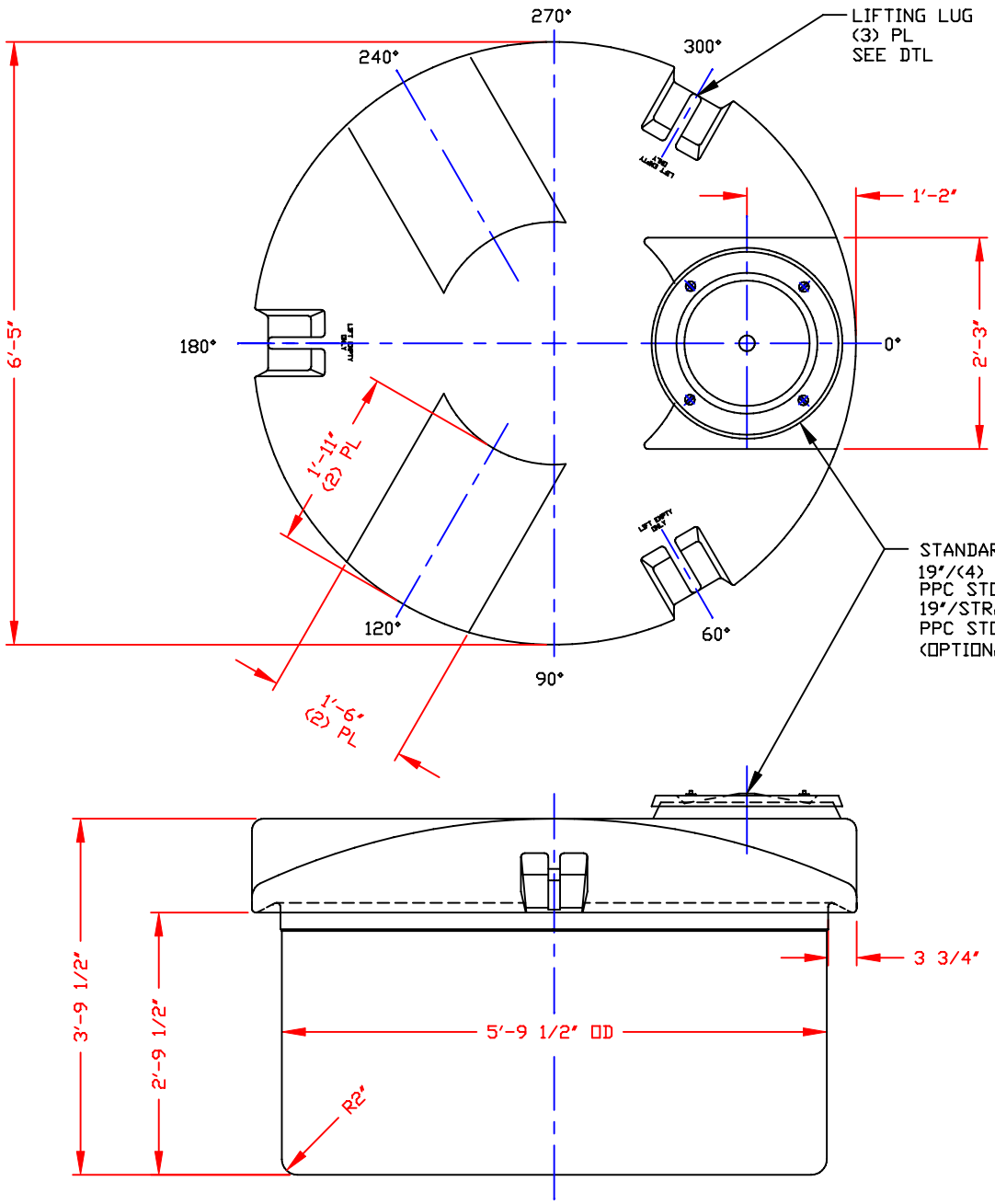

STANDARD COVER:
19"/(4) BOLT MANWAY COVER/PE (SHOWN)
PPC STOCK NO. 3213 OR
19"/STRAPPED MANWAY COVER/PE
PPC STOCK NO. 3212
(OPTIONAL 19" COVERS AVAILABLE)

NOZZLE SCHEDULE & ACCESSORIES

SERVICE	MK	STOCK NO.	SIZE	FITTING	DEG	ELEV

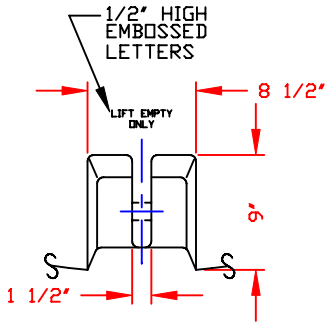

LIFTING LUG DETAIL
SCALE: NONE

NOTES:
1. THIS IS A COMPUTER GENERATED DWG. DO NOT REVISE BY HAND.
2. DIMENSIONS WILL VARY ±3% DUE TO VARIATIONS IN MULTIPLE MOLDS & CONDITIONS PREVALENT DURING MANUFACTURE & USAGE.
3. FOR OUTER TANK DTLS SEE COMPUTER FILE NO. 2100655. TITLE "540 GALLON OUTER SAFE-TANK/655 GALLON OPEN TOP TANK." FOR ASSEMBLY SEE COMPUTER FILE NO. 2000540A, TITLE "540 GALLON SAFE-TANK ASSEMBLY."

CALCULATED CAPACITIES/ VOLUME IN U.S. GALLONS		
DESIGN CAP	DOME VOL	TOTAL VOL
542	105	647

CONFIDENTIAL PROPERTY OF POLY PROCESSING COMPANY NOT FOR REPRINT OR USE WITHOUT PERMISSION

DWG TITLE: 540 GALLON INNER SAFE-TANK

SCALE: 3/4"=1'-0"

DATE: 11/23/99

POLYPROCESSING COMPANY

Central Region
P.O. Box 4150 (71211)
2001 Old Sterlington Rd.
Monroe, LA 71203
(318) 343-7565
FAX (318) 343-8795

DR: MB WILKERSON

CK: D. RECTOR

SHEET	COMPUTER FILE	REV
1 OF 1	2000540	A

REV "A" REVISED FOR MOLD MODIFICATIONS BY:MBW 1/28/03 CK:BT

8-75