NON-CONTROLLED COPY	COPY ISSUED BY_____.
INFORMATION SUBJECT TO CHANGE WITHOUT NOTICE	
COPY WILL NOT BE UPDATED	COPY ISSUED ON_____.

REV "A" REVISED FOR MOLD MODIFICATIONS BY:MBW 1/30/03 CK:BT
REV "B" ADDED FITTING NOTE BY:MBW 4/16/03 CK:JB

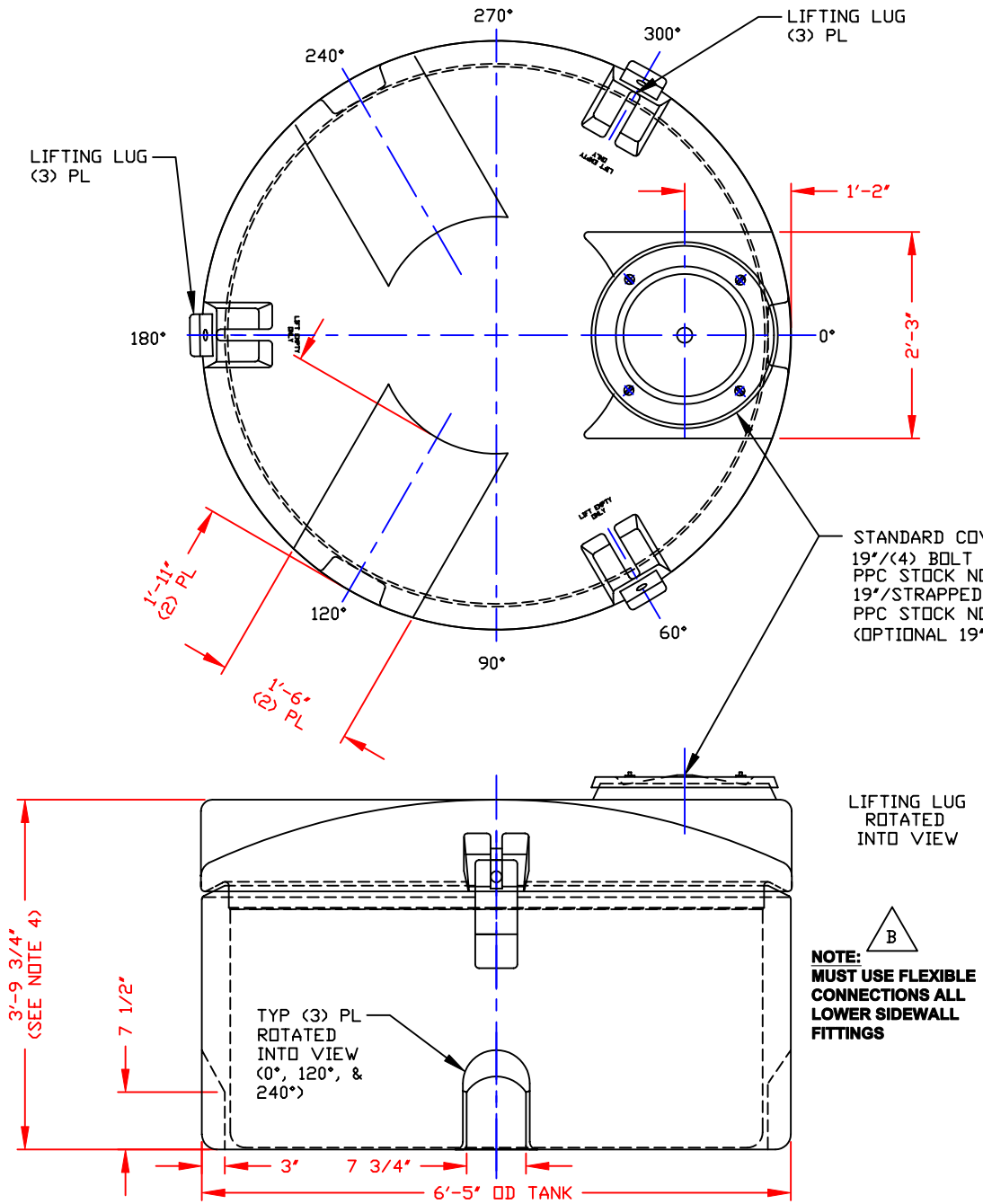

NOTE:
MUST USE FLEXIBLE CONNECTIONS ALL LOWER SIDEWALL FITTINGS

B

NOZZLE SCHEDULE & ACCESSORIES

SERVICE	MK	STOCK NO.	SIZE	FITTING	DEG	ELEV

NOTES:
1. THIS IS A COMPUTER GENERATED DWG. DO NOT REVISE BY HAND.
2. DIMENSIONS WILL VARY ±3% DUE TO VARIATIONS IN MULTIPLE MOLDS & CONDITIONS PREVALENT DURING MANUFACTURE & USAGE.
3. FOR INNER TANK DTLS SEE COMPUTER FILE NO. 2000540, TITLE "540 GALLON INNER SAFE-TANK." FOR OUTER TANK DTLS SEE COMPUTER FILE NO. 2100655, TITLE "540 GALLON OUTER SAFE-TANK/ 655 GALLON OPEN TOP TANK."
4. OVERALL HEIGHT WILL VARY WITH THE PENETRATION OF THE INNER TANK INTO THE OUTER TANK.

CALCULATED CAPACITIES/ VOLUME IN U.S. GALLONS

TANK	DESIGN CAP	DOME VOL	TOTAL VOL
INNER	542	105	647
OUTER	659	N/A	659

CONFIDENTIAL PROPERTY OF POLY PROCESSING COMPANY NOT FOR REPRINT OR USE WITHOUT PERMISSION

DWG TITLE: 540 GALLON SAFE-TANK ASSEMBLY

SCALE: 3/4"=1'-0"
DATE: 11/23/99

POLY PROCESSING Company
Central Region
P.O. Box 4150 (71211)
2201 Old Sterlington Rd.
Monroe, LA 71203
(318) 343-7565
FAX (318) 343-8795

DR: MB WILKERSON
CK: D. RECTOR

SHEET	COMPUTER FILE	REV
1 OF 1	2000540A	B

B-75