NON-CONTROLLED COPY	COPY ISSUED BY_____.
INFORMATION SUBJECT TO CHANGE WITHOUT NOTICE	
COPY WILL NOT BE UPDATED	COPY ISSUED ON_____.

NOTE:
ALL HIDDEN LINES ARE NOT SHOWN.
SOME ARE SHOWN FOR CLARITY.

NOZZLE SCHEDULE & ACCESSORIES

SERVICE	MK	STOCK NO.	SIZE	FITTING	DEG	ELEV

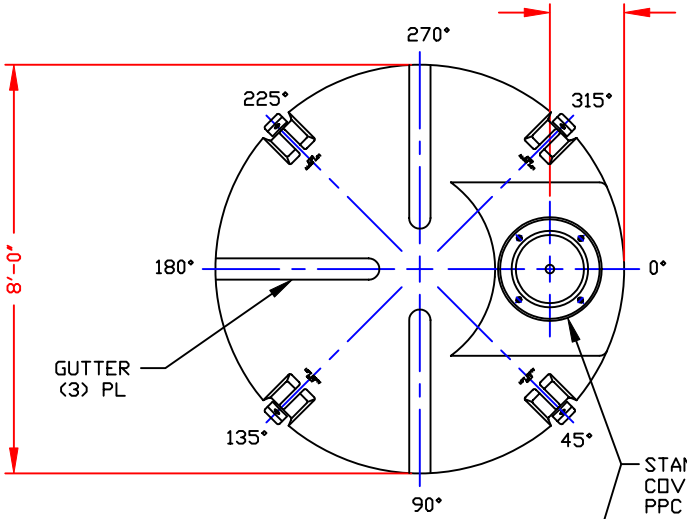

STANDARD COVER: 19"/(4) BOLT MANWAY
COVER/PE (SHOWN)
PPC STOCK NO. 3213
19"/STRAPPED MANWAY COVER/PE
PPC STOCK NO. 3212
(OPTIONAL 19" COVERS AVAILABLE)

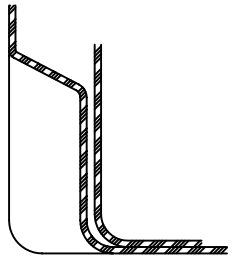

POCKET DETAIL
SCALE: 1 1/2" = 1'-0"

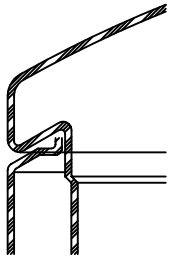

LIP DETAIL
SCALE: 1 1/2" = 1'-0"

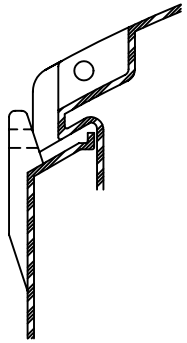

LIP DETAIL AT LUG
SCALE: 1 1/2" = 1'-0"

NOTE:
LUGS & SIDE POCKETS ROTATED INTO VIEW FOR CLARITY.
SEE PLAN VIEW FOR DEGREE LOCATIONS.

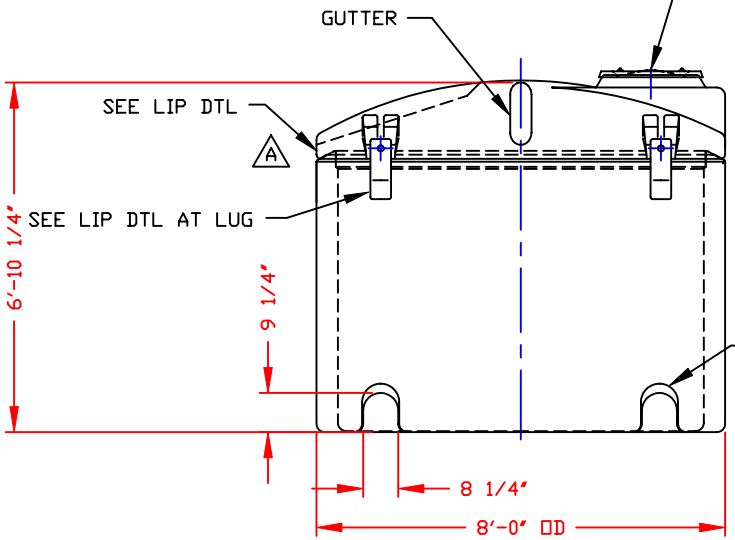

B
NOTE:
MUST USE FLEXIBLE
CONNECTIONS ALL
LOWER SIDEWALL
FITTINGS

NOTES:
1. THIS IS A COMPUTER GENERATED DWG. DO NOT REVISE BY HAND.
2. DIMENSIONS WILL VARY ±3% DUE TO VARIATIONS IN MULTIPLE MOLDS & CONDITIONS PREVALENT DURING MANUFACTURE & USAGE.
3. FOR INNER TANK DTLS SEE COMPUTER FILE NO. 2001550 TITLE "1550 GALLON INNER SAFE-TANK." FOR OUTER TANK DTLS SEE COMPUTER FILE NO. 2101950, TITLE "1550 GALLON OUTER SAFE-TANK/1950 OPEN TOP TANK".

CALCULATED CAPACITIES/
VOLUME IN U.S. GALLONS

TANK	DESIGN CAP	DOME VOL	TOTAL VOL
INNER	1586	204	1790
OUTER	1954	N/A	1954

CONFIDENTIAL PROPERTY OF
POLY PROCESSING COMPANY
NOT FOR REPRINT OR USE
WITHOUT PERMISSION

DWG TITLE
1550 GALLON SAFE-TANK ASSEMBLY

SCALE: 3/8"=12"
DATE: 12/2/99

POLY PROCESSING Company
Central Region
P.O. Box 4150 (71211)
2201 Old Sterlington Rd.
Monroe, LA 71203
(318) 343-7565
FAX (318) 343-8795

DR: MB WILKERSON
CK: J. BRANTLEY

SHEET	COMPUTER FILE	REV
1 OF 1	2001550A	B

REV "B" ADDED FITTING NOTE BY:MBW 4/16/03 CK:JB
REV "A" MODIFICATION TO MOLD BY:MBW 3/21/02 CK:BT

B-375