NON-CONTROLLED COPY

INFORMATION SUBJECT TO CHANGE WITHOUT NOTICE

VERIFY REV LEVEL OF PAPER COPY WITH REV LEVEL ON PPC WEB SITE

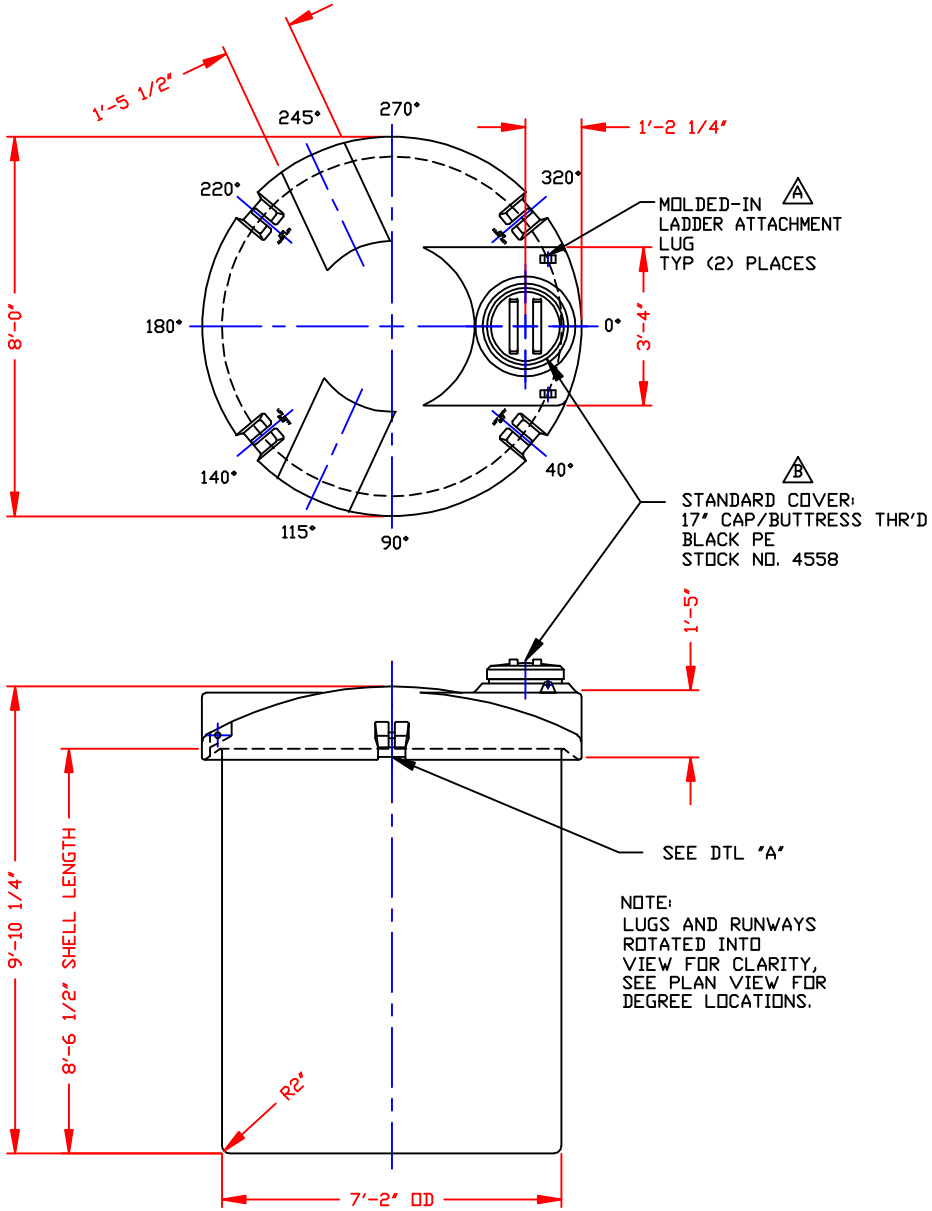

NOTE:
LUGS AND RUNWAYS ROTATED INTO VIEW FOR CLARITY, SEE PLAN VIEW FOR DEGREE LOCATIONS.

NOZZLE SCHEDULE & ACCESSORIES

SERVICE	MK	STOCK NO.	SIZE	FITTING	DEG	ELEV

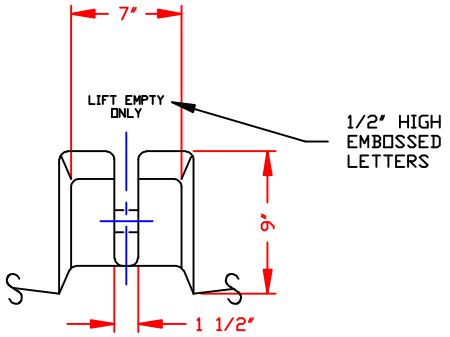

DETAIL "A"
SCALE: NONE

NOTES:
1. THIS IS A COMPUTER GENERATED DWG. DO NOT REVISE BY HAND.
2. DIMENSIONS WILL VARY ±3% DUE TO VARIATIONS IN MULTIPLE MOLDS & CONDITIONS PREVALENT DURING MANUFACTURE & USAGE.
3. FOR OUTER TANK DTLS SEE COMPUTER FILE NO. 12103100, TITLE "2500 GALLON OUTER SAFE-TANK/3100 GALLON OPEN TOP TANK." FOR ASSEMBLY DTLS SEE COMPUTER FILE NO. 12002500A, TITLE "2500 GALLON SAFE-TANK ASSEMBLY."

CALCULATED CAPACITIES/ VOLUME IN U.S. GALLONS		
DESIGN CAP	DOME VOL	TOTAL VOL
2517	246	2763

CONFIDENTIAL PROPERTY OF POLY PROCESSING COMPANY NOT FOR REPRINT OR USE WITHOUT PERMISSION

DWG TITLE: 2500 GALLON INNER SAFE-TANK

SCALE: 3/8"=1'-0"

DATE: 1/15/04

POLYPROCESSING COMPANY

Central Region
P.O. Box 4150 (71211)
2224 Old Sterlington Rd.
Monroe, LA 71203
(318) 343-7365
FAX (318) 343-8795

DR: MB WILKERSON

CK: J. BRANTLEY

SHEET	COMPUTER FILE	REV
1 OF 1	2002500	B

REV "B" REVISED COVER BY:JB 7/27/09 CK:WM

REV "A" ADDED LADDER ATTACHMENT LUGS BY:JB 8/13/04 CK:WM

B-375