NON-CONTROLLED COPY

INFORMATION SUBJECT TO CHANGE WITHOUT NOTICE

VERIFY REV LEVEL OF PAPER COPY WITH REV LEVEL ON PPC WEB SITE

NOZZLE SCHEDULE & ACCESSORIES

SERVICE	MK	STOCK NO.	SIZE	FITTING	DEG	ELEV

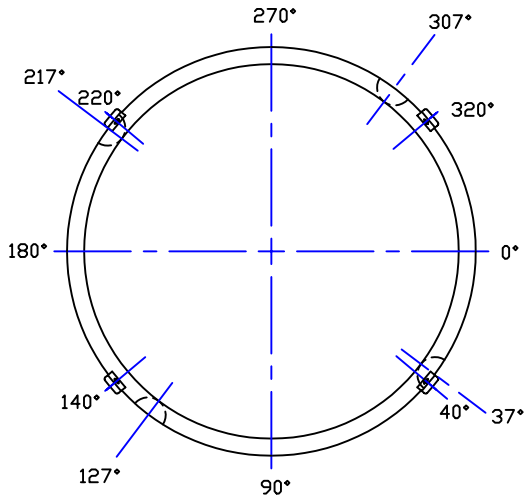

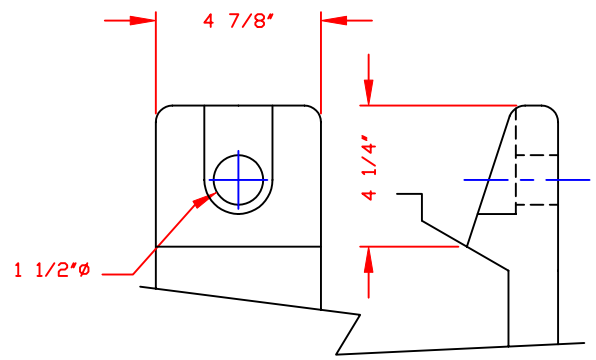

LUG DETAIL "A"
SCALE: NONE

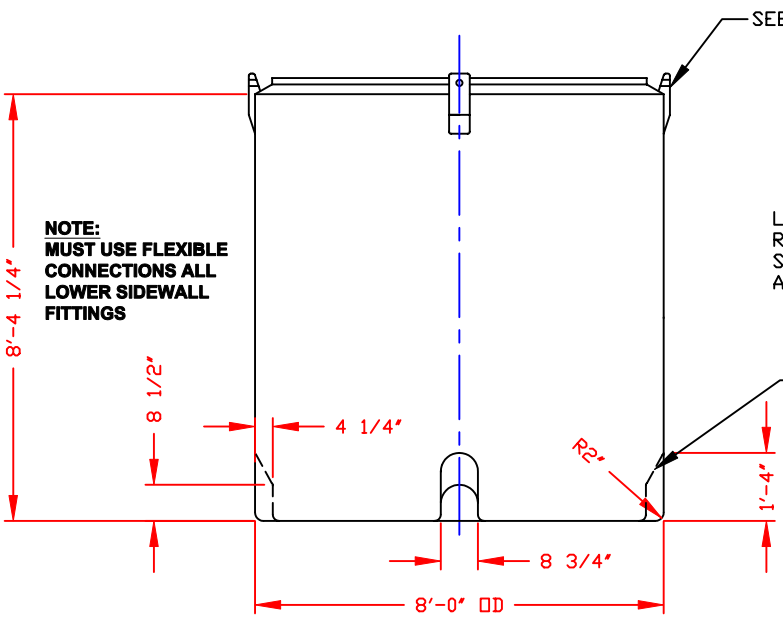

NOTE:
MUST USE FLEXIBLE CONNECTIONS ALL LOWER SIDEWALL FITTINGS

LUGS AND POCKETS ROTATED INTO VIEW SEE PLAN FOR ACTUAL LOCATION

ALLIGNMENT POCKET NOT TO BE USED FOR FITTINGS

NOTES:
1. THIS IS A COMPUTER GENERATED DWG. DO NOT REVISE BY HAND.
2. DIMENSIONS WILL VARY ±3% DUE TO VARIATIONS IN MULTIPLE MOLDS & CONDITIONS PREVALENT DURING MANUFACTURE & USAGE.
3. NO MOLDED IN GALLONAGE MARKERS THIS TANK.
4. FOR INNER TANK DTLS SEE COMPUTER FILE NO. 12002500, TITLE "2500 GALLON INNER SAFE-TANK." FOR ASSEMBLY DTLS SEE COMPUTER FILE NO. 12002500A, TITLE, "2500 GALLON SAFE-TANK ASSEMBLY."

CALCULATED CAPACITIES/ VOLUME IN U.S. GALLONS
DESIGN CAPACITY
3125

CONFIDENTIAL PROPERTY OF POLY PROCESSING COMPANY NOT FOR REPRINT OR USE WITHOUT PERMISSION

DWG TITLE: 2500 GALLON OUTER SAFE TANK
3100 OPEN TOP TANK

SCALE: 3/8"=1'-0"
DATE: 1/15/04

POLY PROCESSING Company

Central Region
P.O. Box 80
8055 South Ash Street
French Camp, CA 95231
(209) 982-4904
FAX (209) 982-0455

DR: MB WILKERSON
CK: J. BRANTLEY

SHEET	COMPUTER FILE	REV
1 OF 1	2103100	-

B-375