NON-CONTROLLED COPY	COPY ISSUED BY_____.
INFORMATION SUBJECT TO CHANGE WITHOUT NOTICE	
COPY WILL NOT BE UPDATED	COPY ISSUED ON_____.

NOZZLE SCHEDULE & ACCESSORIES

SERVICE	MK	STOCK NO.	SIZE	FITTING	DEG	ELEV

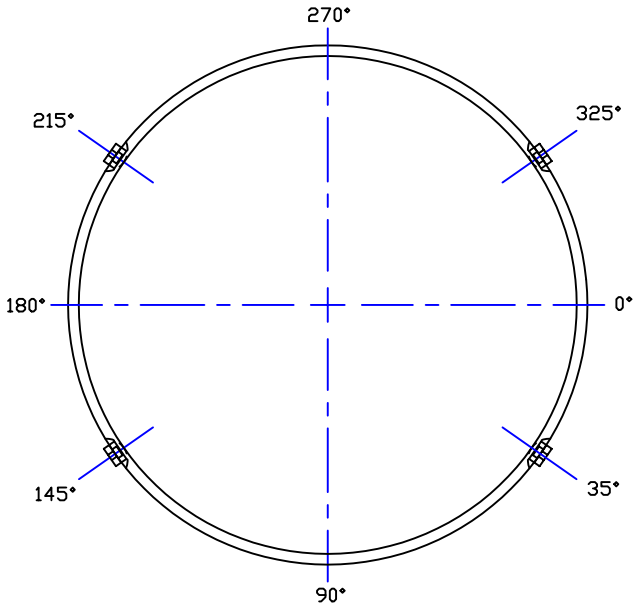

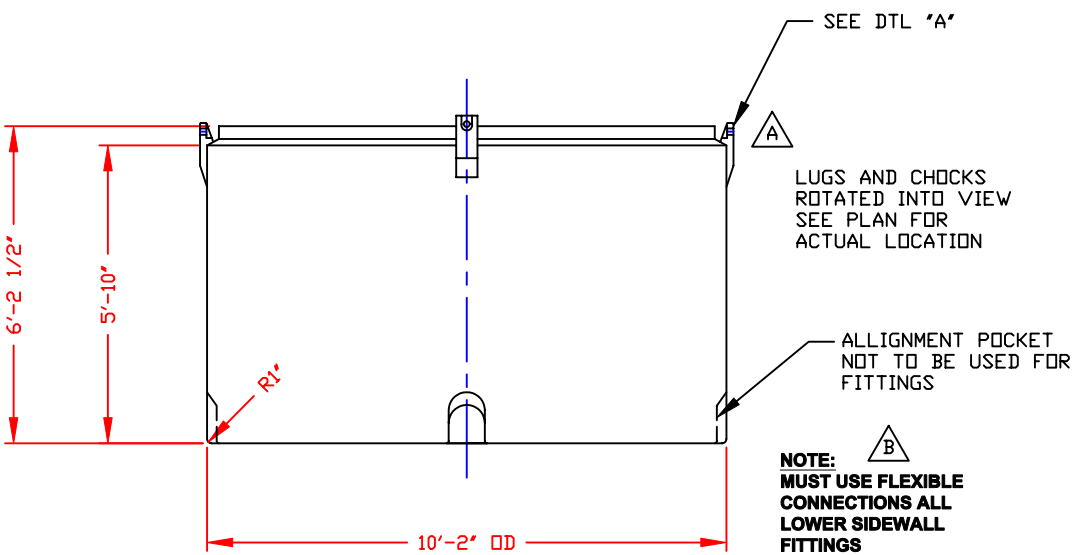

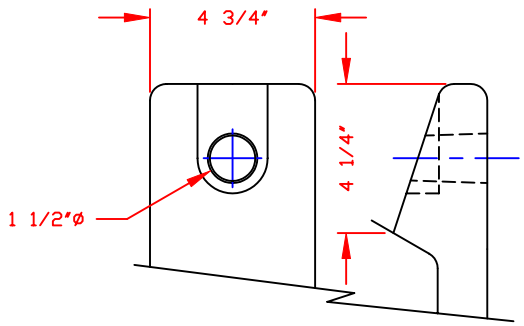

LUG DETAIL "A"
SCALE: 1 1/2" = 1'-0"

NOTES:
1. THIS IS A COMPUTER GENERATED DWG. DO NOT REVISE BY HAND.
2. DIMENSIONS WILL VARY ±3% DUE TO VARIATIONS IN MULTIPLE MOLDS & CONDITIONS PREVALENT DURING MANUFACTURE & USAGE.
3. FOR INNER TANK DTLS SEE COMPUTER FILE NO. 2003150, TITLE "3150 GALLON INNER SAFE-TANK" FOR ASSEMBLY DTLS SEE COMPUTER FILE NO. 2003150A, TITLE "3150 GALLON SAFE-TANK ASSEMBLY."

CALCULATED CAPACITY VOLUME IN U.S. GALLONS
DESIGN CAPACITY
3551

CONFIDENTIAL PROPERTY OF POLY PROCESSING COMPANY NOT FOR REPRINT OR USE WITHOUT PERMISSION

DWG TITLE: 3150 GALLON OUTER SAFE-TANK/ 3550 GALLON OPEN TOP TANK			
SCALE: 3/8"=1'-0"	POLY PROCESSING Company	Central Region P.O. Box 4150 (71211) 2201 Old Sterlington Rd. Monroe, LA 71203 (318) 343-7565 FAX (318) 343-8795	DR: MB WILKERSON
DATE: 12/6/99			CK: D. RECTOR
		SHEET 1 OF 1	COMPUTER FILE 2103550 / REV B

REV "B" ADDED FITTING NOTE BY:MBW 4/16/03 CK:JB
REV "A" MODIFICATION TO MOLD BY:MBW 9/10/02 CK:JB

B-375