NON-CONTROLLED COPY
INFORMATION SUBJECT TO CHANGE WITHOUT NOTICE
VERIFY REV LEVEL OF PAPER COPY WITH REV LEVEL ON PPC WEB SITE

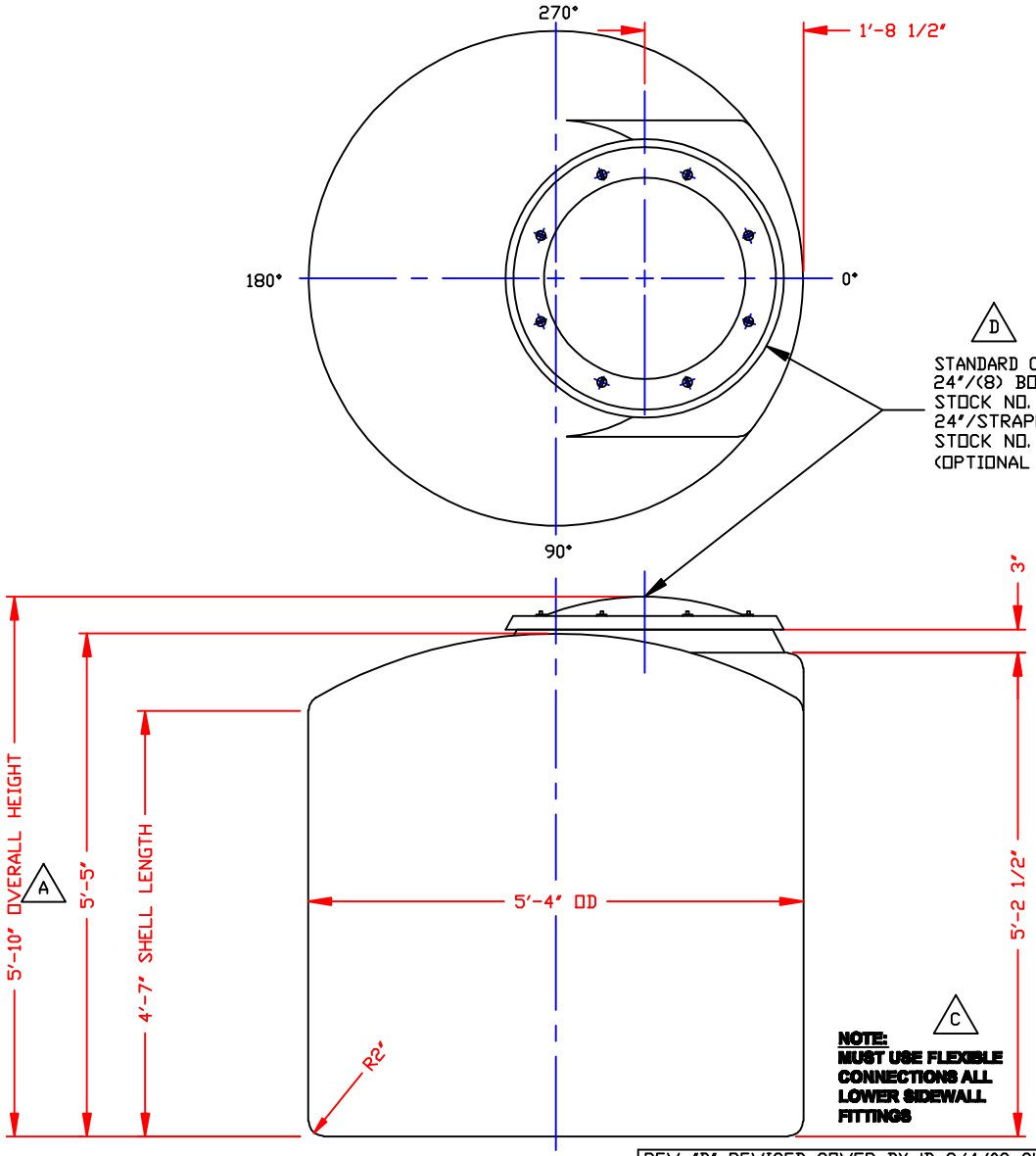

NOZZLE SCHEDULE & ACCESSORIES

SERVICE	MK	STOCK NO.	SIZE	FITTING	DEG	ELEV

NOTES
1. THIS IS A COMPUTER GENERATED DWG. DO NOT REVISE BY HAND.
2. DIMENSIONS WILL VARY ±3% DUE TO VARIATIONS IN MULTIPLE MOLDS & CONDITIONS PREVALENT DURING MANUFACTURE & USAGE.
3. NO MOLDED IN GALLONAGE MARKERS THIS TANK.

CALCULATED CAPACITIES/ VOLUME IN U.S. GALLONS		
DESIGN CAP	DOME VOL	TOTAL VOL
756	61	817

CONFIDENTIAL PROPERTY OF POLY PROCESSING COMPANY NOT FOR REPRINT OR USE WITHOUT PERMISSION

REV	DESCRIPTION	BY	DATE	CK
D	REVISED COVER	JB	8/4/09	WM
C	ADDED FITTING NOTE	MBW	2/11/03	JB
B	REVISED LID	MBW	2/11/03	JB
A	ADDED DIMENSION	JB	10/15/02	MBW

DWG TITLE: 755 GALLON UPRIGHT TANK

SCALE: 3/4"=1'-0"
DATE: 9/21/99

POLY PROCESSING COMPANY LLC
Central Region
P.O. Box 4150 (71211)
2201 Old Sterlington Rd.
Monroe, LA 71203
(318) 343-7365
FAX (318) 343-8795

DR: MB WILKERSON
CK: D. RECTOR

SHEET	COMPUTER FILE	REV
1 OF 1	1000755	D

B-75