NON-CONTROLLED COPY	COPY ISSUED BY_____.
INFORMATION SUBJECT TO CHANGE WITHOUT NOTICE	
COPY WILL NOT BE UPDATED	COPY ISSUED ON_____.

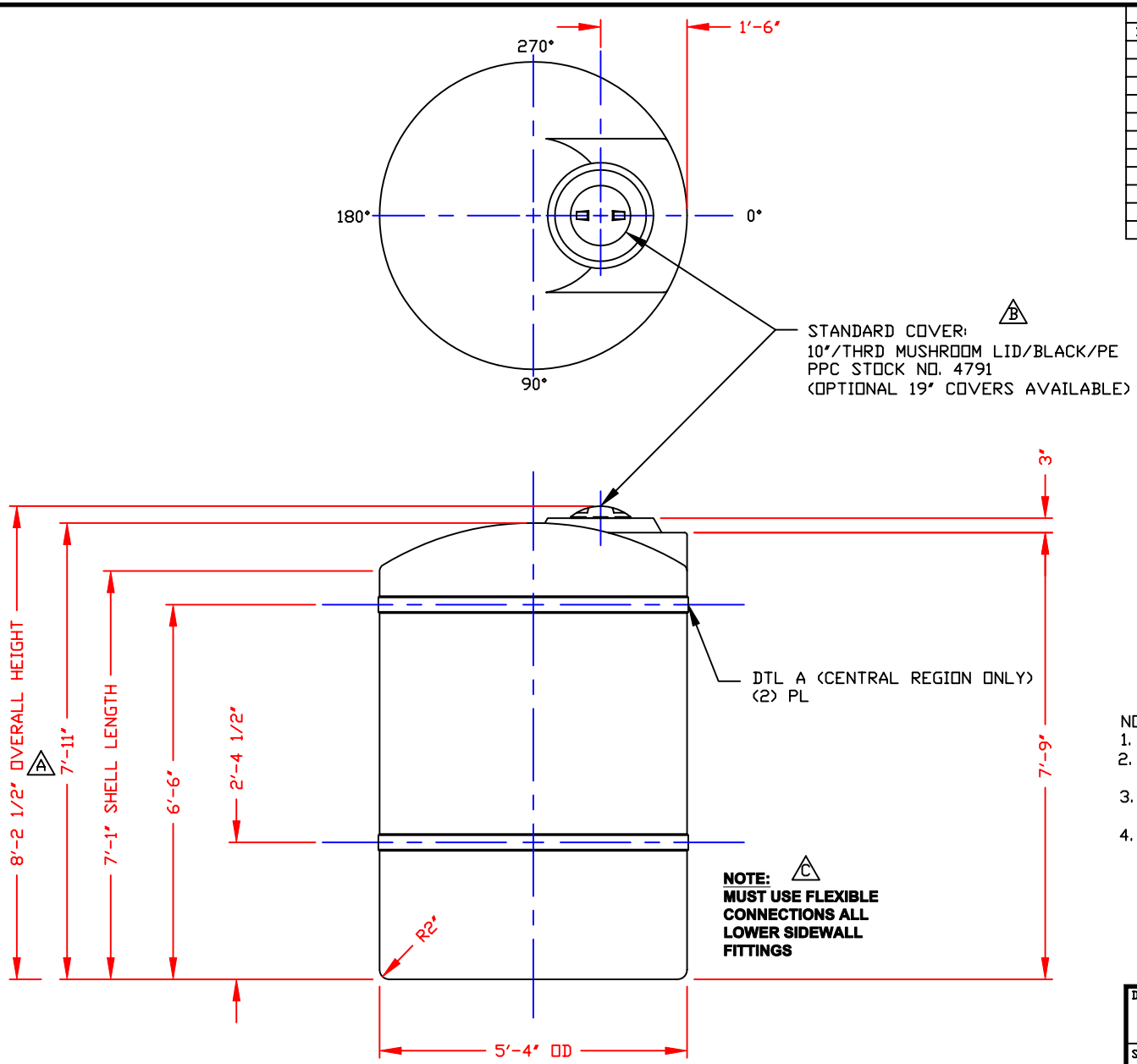

NOZZLE SCHEDULE & ACCESSORIES

SERVICE	MK	STOCK NO.	SIZE	FITTING	DEG	ELEV

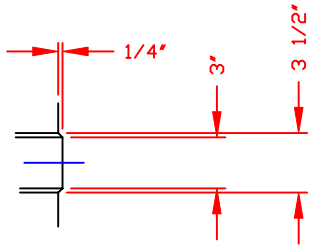

DETAIL A
MOLDED STIFFENER BAND
(2) PLACES
SCALE: 1 1/2"=1'0"

NOTES
1. THIS IS A COMPUTER GENERATED DWG. DO NOT REVISE BY HAND.
2. DIMENSIONS WILL VARY ±3% DUE TO VARIATIONS IN MULTIPLE MOLDS & CONDITIONS PREVALENT DURING MANUFACTURE & USAGE.
3. 4" WIDE MOLDED IN GALLONAGE MARKERS AT APPROX. 15° UP TO 1000 GAL. AVOID WHEN FITTING. CENTRAL REGION.
4. 4" WIDE MOLDED IN GALLONAGE MARKERS AT APPROX. 6° UP TO 1000 GAL. AVOID WHEN FITTING. EASTERN REGION.

CALCULATED CAPACITIES/ VOLUME IN U.S. GALLONS		
DESIGN CAP	DOME VOL	TOTAL VOL
1168	61	1229

CONFIDENTIAL PROPERTY OF POLY PROCESSING COMPANY NOT FOR REPRINT OR USE WITHOUT PERMISSION

DWG TITLE: 1150 GALLON UPRIGHT TANK

SCALE: 1/2"=1'-0"
DATE: 9/22/99

POLY PROCESSING Company
Central Region
P.O. Box 4150 (71211)
2201 Old Sterlington Rd.
Monroe, LA 71203
(318) 343-7565
FAX (318) 343-8795

DR: MB WILKERSON
CK: D. RECTOR

SHEET	COMPUTER FILE	REV
1 OF 1	1001150	C

REV "C" ADDED FITTING NOTE BY:MBW 2/11/03 CK:JB
REV "B" REVISED LID BY:MBW 2/11/03 CK:JB
REV "A" ADDED DIMENSION BY:JB 10/15/02 CK:MBW

B-5