NON-CONTROLLED COPY	COPY ISSUED BY_____.
INFORMATION SUBJECT TO CHANGE WITHOUT NOTICE	
COPY WILL NOT BE UPDATED	COPY ISSUED ON_____.

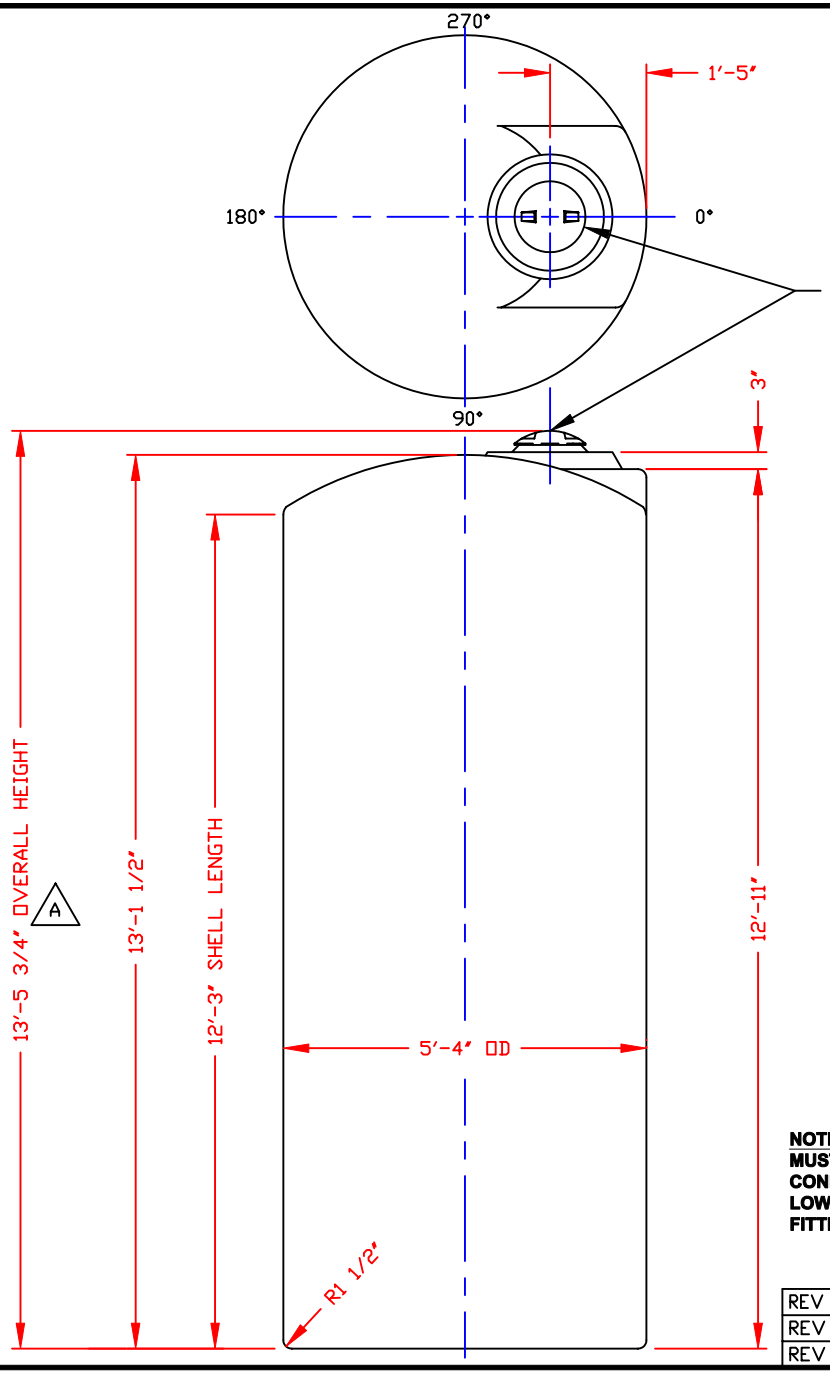

B

STANDARD COVER:
10"/THRD MUSHROOM LID/BLACK/PE
PPC STOCK NO. 4791
(OPTIONAL 19" COVERS AVAILABLE)

C

NOTE:
MUST USE FLEXIBLE CONNECTIONS ALL LOWER SIDEWALL FITTINGS

NOZZLE SCHEDULE & ACCESSORIES

SERVICE	MK	STOCK NO.	SIZE	FITTING	DEG	ELEV

NOTES
1. THIS IS A COMPUTER GENERATED DWG. DO NOT REVISE BY HAND.
2. DIMENSIONS WILL VARY ±3% DUE TO VARIARIONS IN MULTIPLE MOLDS & CONDITIONS PREVALENT DURING MANUFACTURE & USAGE.
3. 4 1/2" WIDE MOLDED IN GALLONAGE MARKERS @ APPROX 15° IN 100 GAL INCREMENTS UP TO 2000 GAL. AVOID WHEN PLACING FTGS.

CALCULATED CAPACITIES/ VOLUME IN U.S. GALLONS		
DESIGN CAP	DOME VOL	TOTAL VOL
1999	61	2060

CONFIDENTIAL PROPERTY OF POLY PROCESSING COMPANY NOT FOR REPRINT OR USE WITHOUT PERMISSION

REV		
REV "C"	ADDED FITTING NOTE BY:MBW 2/17/03	CK:JB
REV "B"	REVISED LID BY:MBW 2/17/03	CK:JB
REV "A"	ADDED DIMENSION BY:JB 10/18/02	CK:MBW

DWG TITLE: 1950 GALLON UPRIGHT TANK

SCALE: 1/2"=1'-0"
DATE: 9/24/99

POLY PROCESSING Company

Central Region
P.O. Box 4150 (71211)
2201 Old Sterlington Rd.
Monroe, LA 71203
(318) 343-7563
FAX (318) 343-8795

DR: MB WILKERSON
CK: D. RECTOR

SHEET	COMPUTER FILE	REV
1 OF 1	1001950	C

B-5