NON-CONTROLLED COPY	COPY ISSUED BY_____.
INFORMATION SUBJECT TO CHANGE WITHOUT NOTICE	
COPY WILL NOT BE UPDATED	COPY ISSUED ON_____.

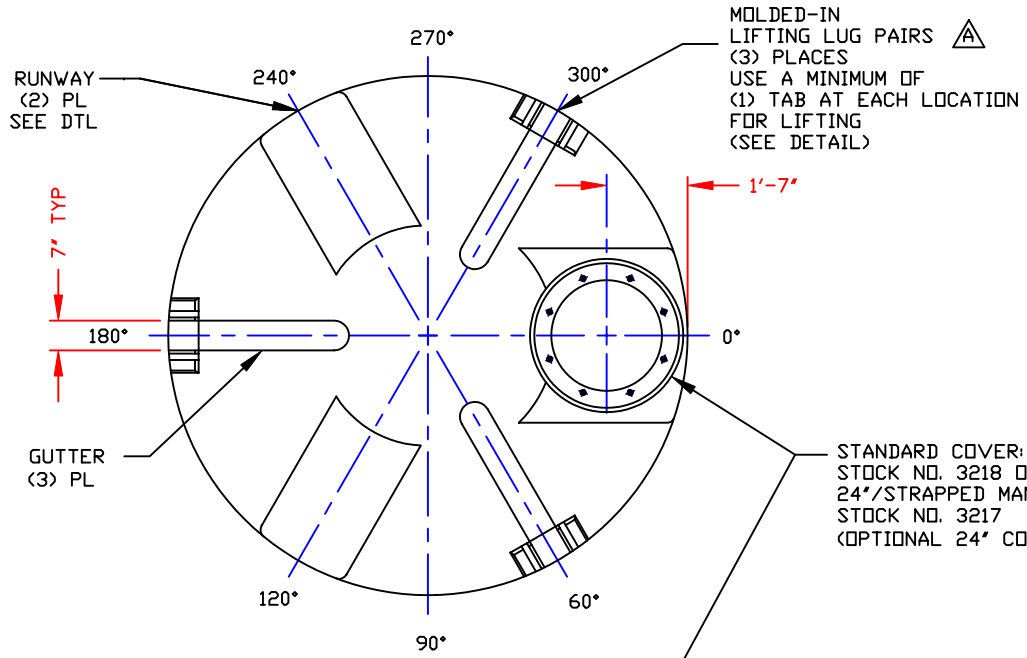

NOZZLE SCHEDULE & ACCESSORIES

SERVICE	MK	STOCK NO.	SIZE	FITTING	DEG	ELEV

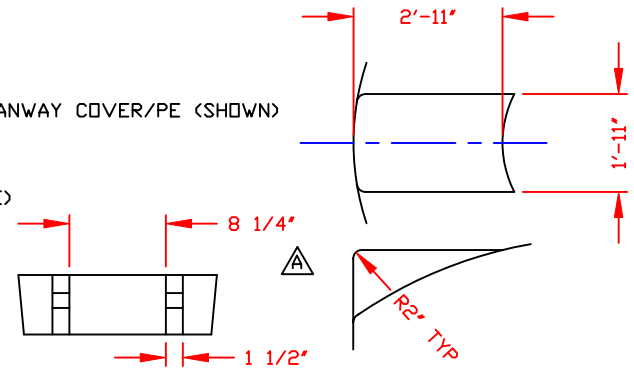

LIFTING LUG DETAIL
(3) PLACES
SCALE: 1"=1'-0"

RUNWAY DETAIL
(2) PLACES

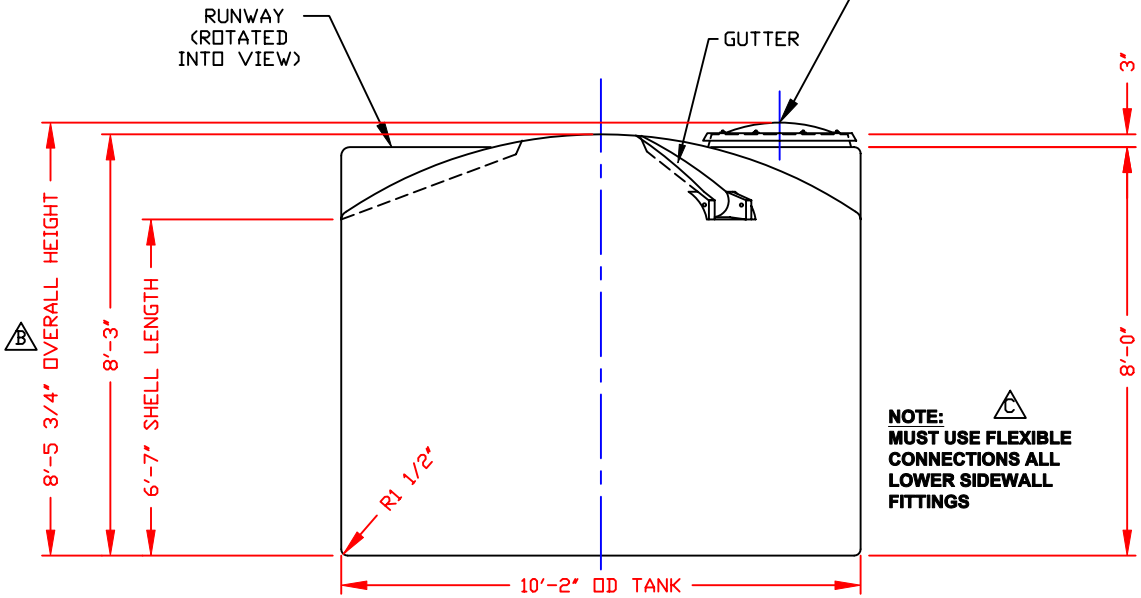

NOTE: C
MUST USE FLEXIBLE CONNECTIONS ALL LOWER SIDEWALL FITTINGS

NOTES
1. THIS IS A COMPUTER GENERATED DWG. DO NOT REVISE BY HAND.
2. NO MOLDED IN GALLONAGE MARKERS THIS TANK.
3. DIMENSIONS WILL VARY ±3% DUE TO VARIATIONS IN MULTIPLE MOLDS & CONDITIONS PREVALENT DURING MANUFACTURE & USAGE.

CALCULATED CAPACITIES/ VOLUME IN U.S. GALLONS		
DESIGN CAP	DOME VOL	TOTAL VOL
3944	419	4363

CONFIDENTIAL PROPERTY OF POLY PROCESSING COMPANY NOT FOR REPRINT OR USE WITHOUT PERMISSION

DWG TITLE: 3850 GALLON UPRIGHT TANK

SCALE: 3/8"=1'-0"
DATE: 8-16-99

POLY PROCESSING Company
Central Region
P.O. Box 4150 (71211)
2201 Old Sterlington Rd.
Monroe, LA 71203
(318) 343-7565
FAX (318) 343-8795

DR: D. RECTOR
CK: J. BRANTLEY

SHEET: 1 OF 1
COMPUTER FILE: 1003850
REV: C

REV	
C	ADDED FITTING NOTE BY:MBW 2/17/03 CK:JB
B	ADDED DIMENSION BY:JB 10/18/02 CK:MBW
A	ADDED LIFTING LUGS & DETAILS BY:JB 5/7/02 CK:MBW

B-375