NON-CONTROLLED COPY

INFORMATION SUBJECT TO CHANGE WITHOUT NOTICE

VERIFY REV LEVEL OF PAPER COPY WITH REV LEVEL ON PPC WEB SITE

NOZZLE SCHEDULE & ACCESSORIES						
SERVICE	MK	STOCK NO.	SIZE	FITTING	DEG	ELEV

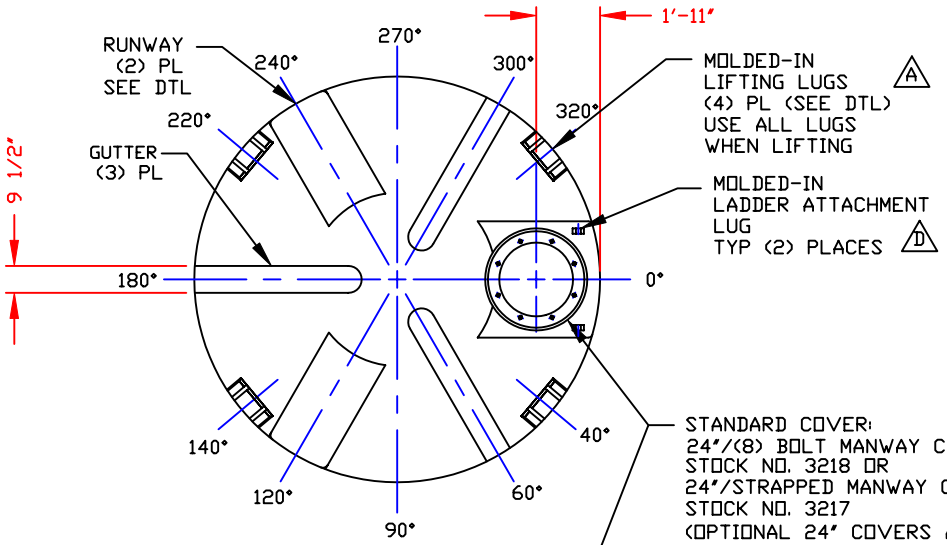

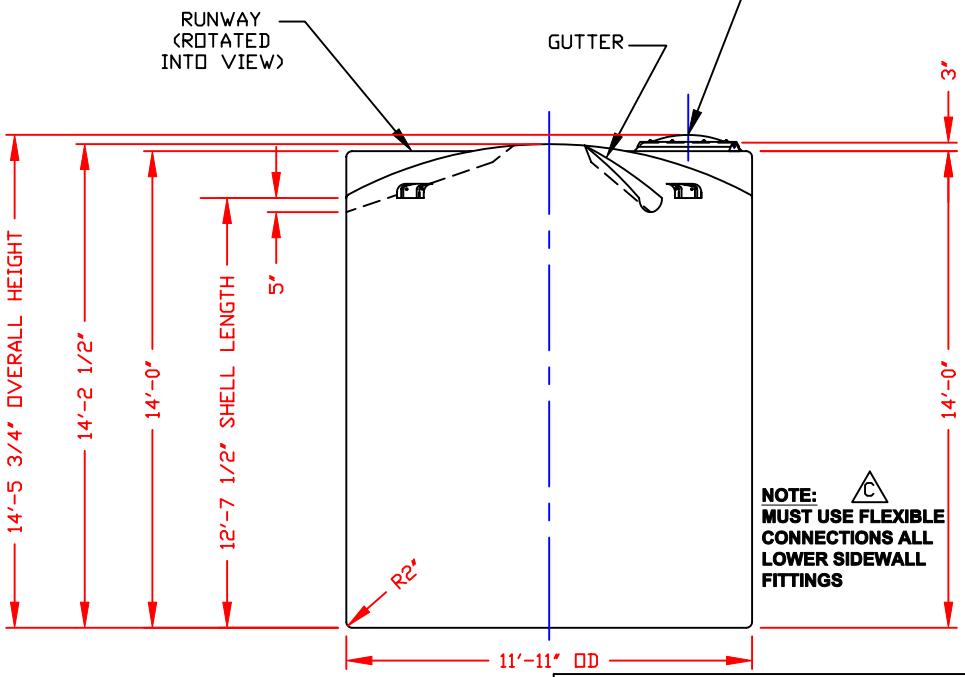

NOTE: C
MUST USE FLEXIBLE CONNECTIONS ALL LOWER SIDEWALL FITTINGS

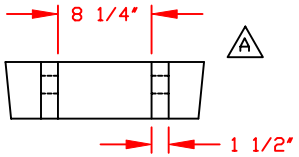

LIFTING LUG DETAIL
(4) PLACES
SCALE: 1"=1'-0"

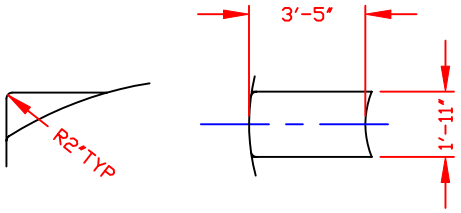

RUNWAY DETAIL
(2) PLACES

NOTES:
1. THIS IS A COMPUTER GENERATED DWG. DO NOT REVISE BY HAND.
2. DIMENSIONS WILL VARY ±3% DUE TO VARIATIONS IN MULTIPLE MOLDS & CONDITIONS PREVALENT DURING MANUFACTURE & USAGE.
3. MOLDED IN GALLONAGE MARKERS @ APPROX 3 1/2" UP TO 9200 GAL.

CALCULATED CAPACITIES/ VOLUME IN U.S. GALLONS		
DESIGN CAP	DOME VOL	TOTAL VOL
10309	675	10984

CONFIDENTIAL PROPERTY OF POLY PROCESSING COMPANY NOT FOR REPRINT OR USE WITHOUT PERMISSION

DWG TITLE: 10300 GALLON UPRIGHT TANK

SCALE: 1/4"=1'-0"

DATE: 10/9/99

POLY PROCESSING Company

Central Region
P.O. Box 4150 (71211)
2201 Old Sterlington Rd.
Monroe, LA 71203
(318) 343-7565
FAX (318) 343-8795

DR: MB WILKERSON

CK: J. BRANTLEY

SHEET: 1 OF 1

COMPUTER FILE: 1010300

REV: D

REV			
REV "D"	ADDED LADDER ATTACHMENT LUGS	BY:JB	5/14/04 CK:MW
REV "C"	ADDED FITTING NOTE	BY:MBW	2/17/03 CK:JB
REV "B"	ADDED DIMENSION	BY:JB	10/22/02 CK:MBW
REV "A"	ADDED LIFTING LUGS & DETAIL	BY:MBW	5/28/02 CK:WM

B-25