NON-CONTROLLED COPY

INFORMATION SUBJECT TO CHANGE WITHOUT NOTICE

VERIFY REV LEVEL OF PAPER COPY WITH REV LEVEL ON PPC WEB SITE

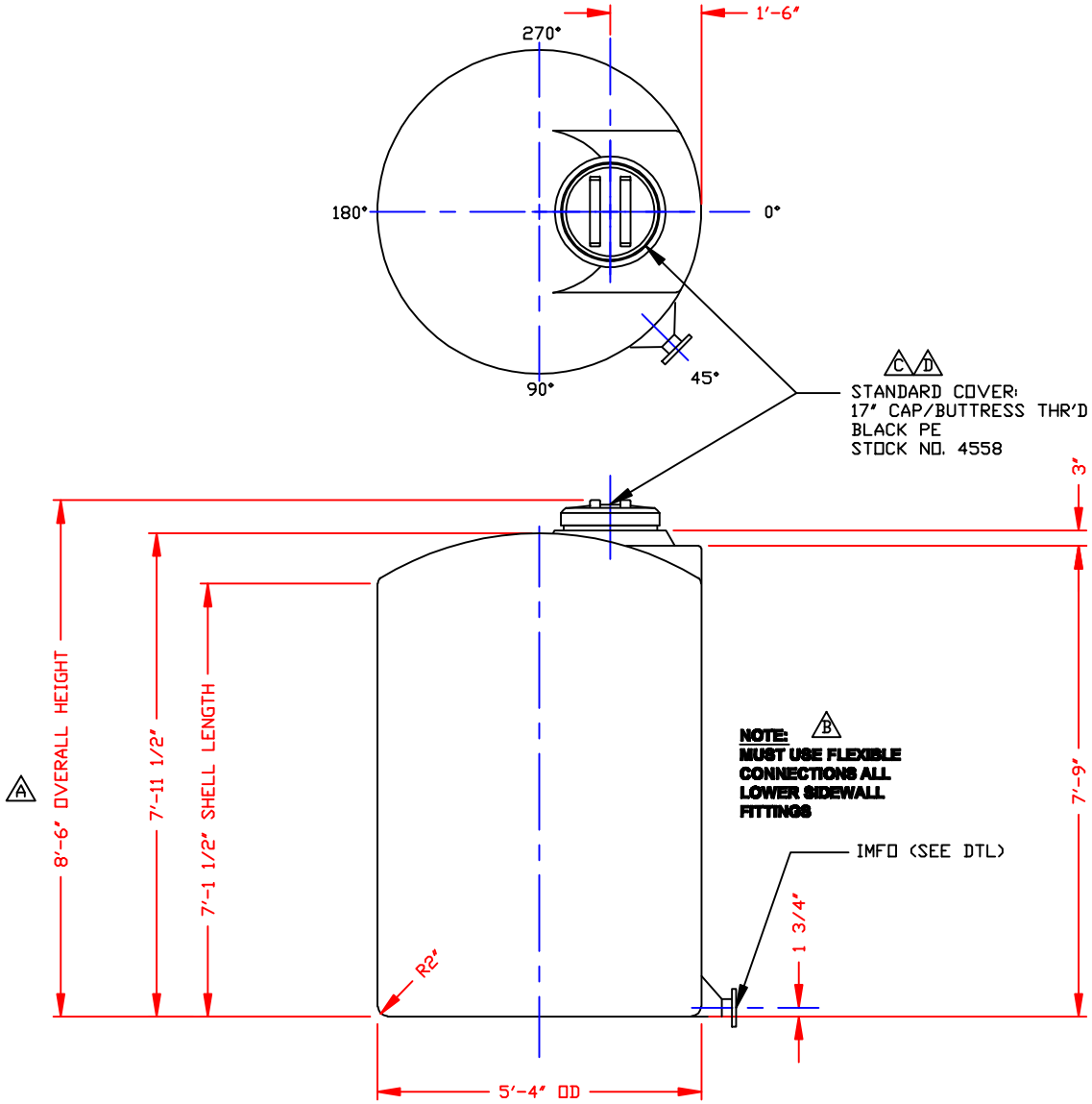

NOZZLE SCHEDULE & ACCESSORIES

SERVICE	MK	STOCK NO.	SIZE	FITTING	DEG	ELEV

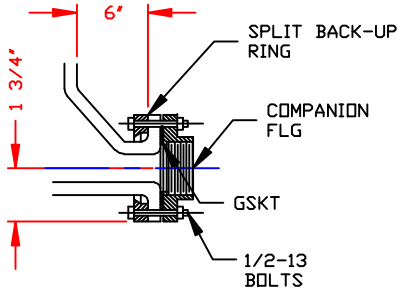

IMFO DETAIL

(INTEGRALLY MOLDED
FLANGED OUTLET)
SCALE: NONE

NOTES
1. THIS IS A COMPUTER GENERATED DWG. DO NOT REVISE BY HAND.
2. DIMENSIONS WILL VARY ±3% DUE TO VARIATIONS IN MULTIPLE MOLDS & CONDITIONS PREVALENT DURING MANUFACTURE & USAGE.
3. MOLDED IN GALLONAGE MARKERS IN MANWAY AREA IN 100 GAL INCREMENTS UP TO 1200 GAL AVOID WHEN PLACING FITTINGS

CALCULATED CAPACITIES/ VOLUME IN U.S. GALLONS

DESIGN CAP	DOME VOL	TOTAL VOL
1181	61	1242

CONFIDENTIAL PROPERTY OF
POLY PROCESSING COMPANY
NOT FOR REPRINT OR USE
WITHOUT PERMISSION

REV "D" REVISED COVER BY:JB 7/27/09 CK:WM	
REV "C" REVISED LID BY:MBW 3/3/03 CK:JB	
REV "C" ADDED FITTING NOTE BY:MBW 3/3/03 CK:JB	
REV "A" ADDED DIMENSION BY:JB 10/15/02 CK:MBW	

DWG TITLE: 1150 GALLON IMFO TANK

SCALE: 1/2"=1'-0"

DATE: 9/22/99

POLYPROCESSING COMPANY LLC

Central Region
P.O. Box 4150 (71211)
2201 Old Sterlington Rd.
Monroe, LA 71203
(318) 343-7365
FAX (318) 343-8795

DR: MB WILKERSON

CK: D. RECTOR

SHEET	COMPUTER FILE	REV
1 OF 1	1101150	D

B-5