NON-CONTROLLED COPY

INFORMATION SUBJECT TO CHANGE WITHOUT NOTICE

VERIFY REV LEVEL OF PAPER COPY WITH REV LEVEL ON PPC WEB SITE

NOZZLE SCHEDULE & ACCESSORIES						
SERVICE	MK	STOCK NO.	SIZE	FITTING	DEG	ELEV

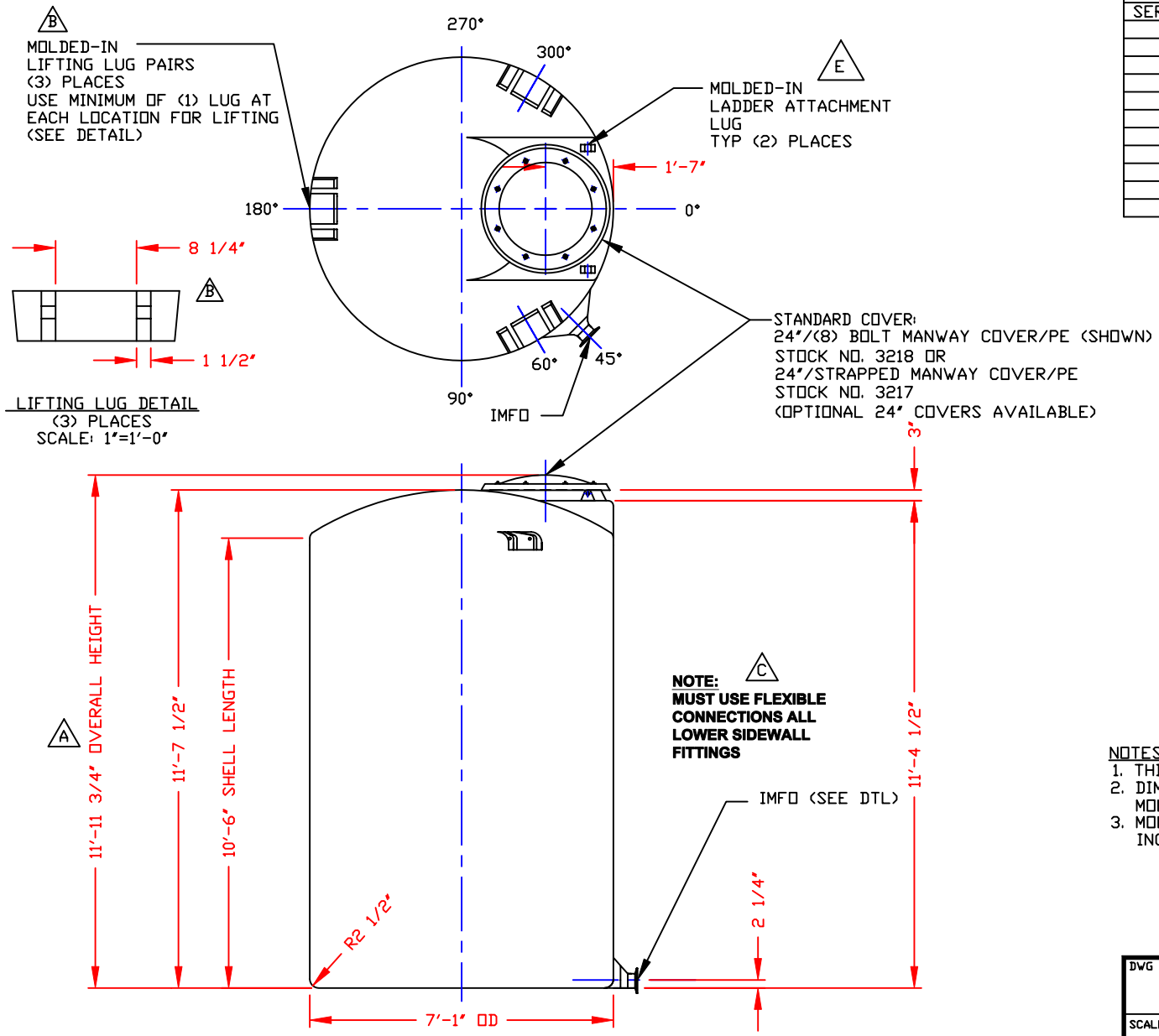

LIFTING LUG DETAIL
(3) PLACES
SCALE: 1"=1'-0"

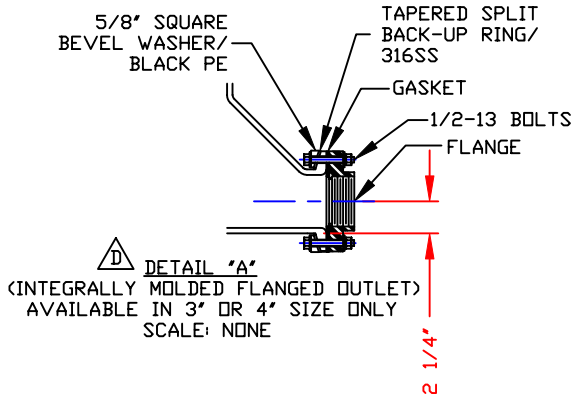

D DETAIL "A"
(INTEGRALLY MOLDED FLANGED OUTLET)
AVAILABLE IN 3" OR 4" SIZE ONLY
SCALE: NONE

NOTES
1. THIS IS A COMPUTER GENERATED DWG. DO NOT REVISE BY HAND.
2. DIMENSIONS WILL VARY ±3% DUE TO VARIATIONS IN MULTIPLE MOLDS & CONDITIONS PREVALENT DURING MANUFACTURE & USAGE.
3. MOLDED IN GALLONAGE MARKERS @ APPROX 60° IN 200 GAL INCREMENTS UP TO 2800 GAL.

CALCULATED CAPACITIES/ VOLUME IN U.S. GALLONS		
DESIGN CAP	DOME VOL	TOTAL VOL
3031	142	3173

CONFIDENTIAL PROPERTY OF POLY PROCESSING COMPANY NOT FOR REPRINT OR USE WITHOUT PERMISSION

REV	DESCRIPTION
"E"	ADDED LADDER ATTACHMENT LUGS BY:JB 8/30/04 CK:WM
"D"	REVISED IMFO STYLE BY:JB 4/30/03 CK:WM
"C"	ADDED FITTING NOTE BY:MBW 3/3/03 CK:JB
"B"	ADDED LIFTING LUGS & DETAIL BY:JB 10/30/02 CK:WM
"A"	ADDED DIMENSION BY:JB 10-18-02 CK:MBW

DWG TITLE: 3000 GALLON IMFO TANK

SCALE: 3/8"=1'-0"

DATE: 11/9/99

POLY PROCESSING Company

Central Region
P.O. Box 4150 (71211)
2201 Old Sterlington Rd.
Monroe, LA 71203
(318) 343-7565
FAX (318) 343-6795

DR: MB WILKERSON

CK: D. RECTOR

SHEET: 1 OF 1

COMPUTER FILE: 1103000

REV: E

B-376