NON-CONTROLLED COPY

INFORMATION SUBJECT TO CHANGE WITHOUT NOTICE

VERIFY REV LEVEL OF PAPER COPY WITH REV LEVEL ON PPC WEB SITE

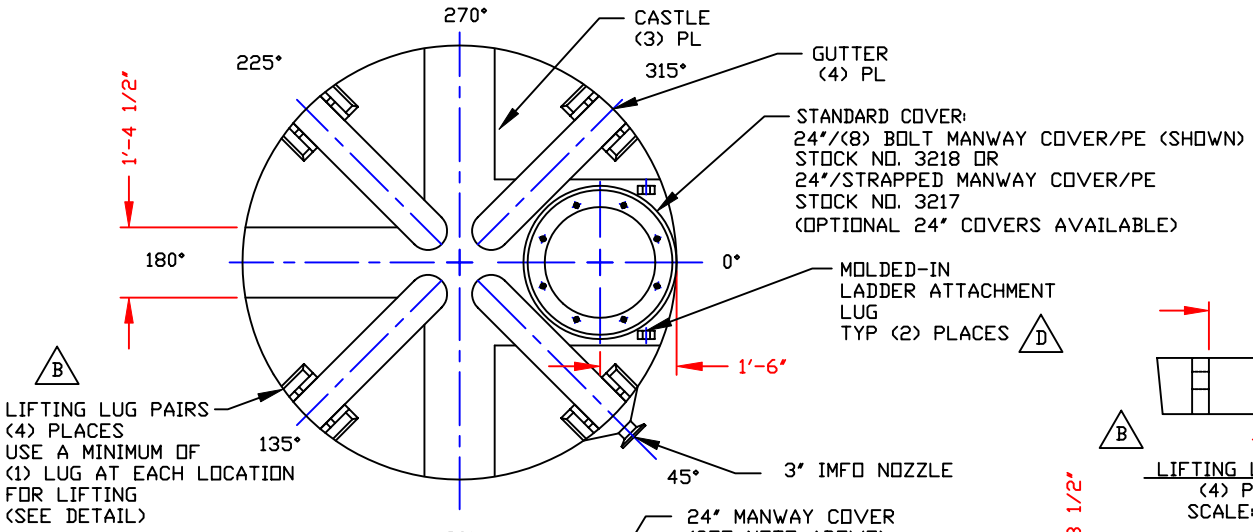

NOZZLE SCHEDULE & ACCESSORIES						
SERVICE	MK	STOCK NO.	SIZE	FITTING	DEG	ELEV

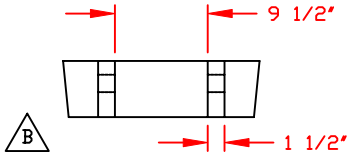

LIFTING LUG DETAIL
(4) PLACES
SCALE: 1"=1'-0"

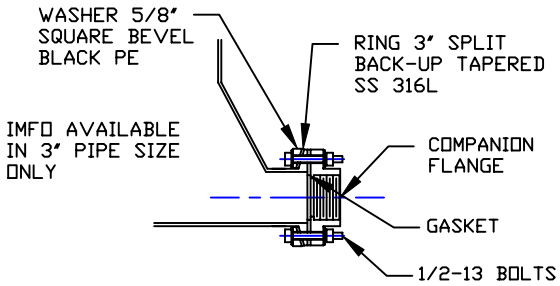

IMFO NOZZLE DETAIL
(INTEGRALLY MOLDED FLANGED OUTLET)
SCALE: NONE

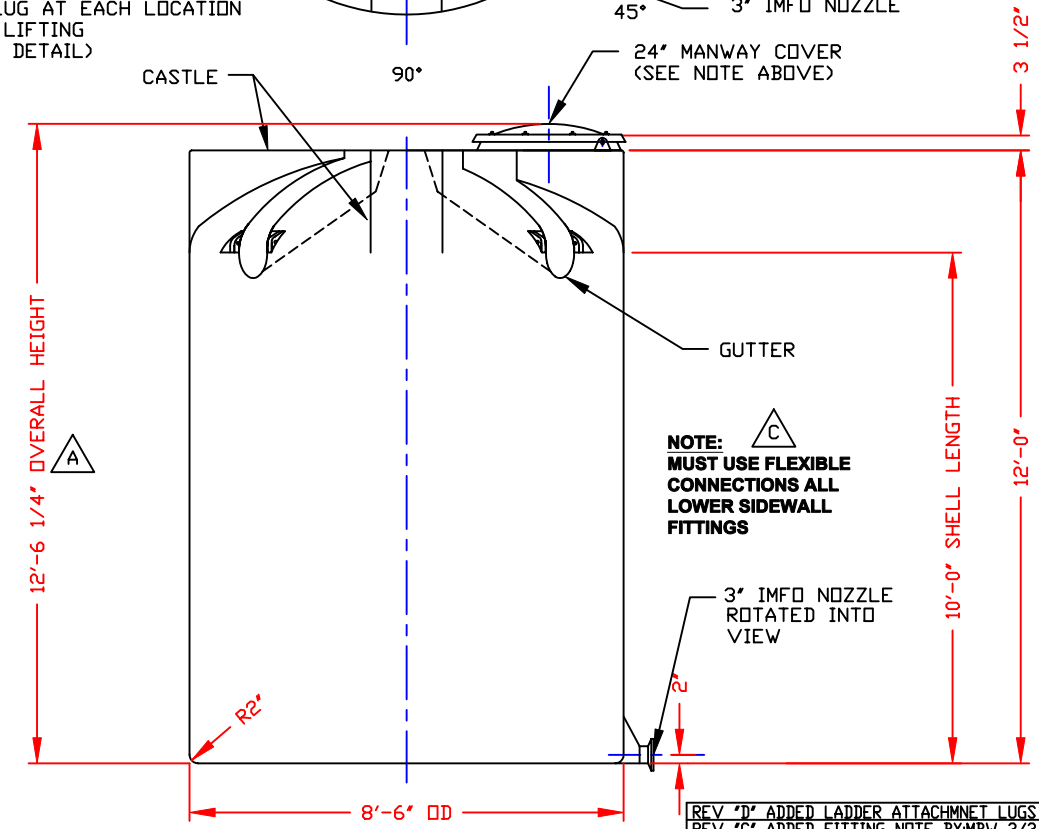

NOTES

1. THIS IS A COMPUTER GENERATED DWG. DO NOT REVISE BY HAND.
2. DIMENSIONS WILL VARY ±3% DUE TO VARIATIONS IN MULTIPLE MOLDS & CONDITIONS PREVALENT DURING MANUFACTURE & USAGE.
3. NO MOLDED IN GALLONAGE MARKERS THIS TANK.

CALCULATED CAPACITIES/ VOLUME IN U.S. GALLONS		
DESIGN CAP	DOME VOL	TOTAL VOL
4162	245	4407

CONFIDENTIAL PROPERTY OF POLY PROCESSING COMPANY NOT FOR REPRINT OR USE WITHOUT PERMISSION

REV	DESCRIPTION
"D"	ADDED LADDER ATTACHMNET LUGS BY:JB 7/8/03 CK:WM
"C"	ADDED FITTING NOTE BY:MBW 3/3/03 CK:JB
"B"	ADDED LIFTING LUGS & DETAIL BY:JB 1/16/03 CK:WM
"A"	ADDED DIMENSION BY:JB 10/18/02 CK:MBW

DWG TITLE: 4150 GALLON IMFO TANK

SCALE: 3/8"=1'-0"

DATE: 11/10/99

POLY PROCESSING Company

Central Region
P.O. Box 4150 (71211)
2201 Old Sterlington Rd.
Monroe, LA 71203
(318) 343-7563
FAX (318) 343-8795

DR: MB WILKERSON

CK: D. RECTOR

SHEET	COMPUTER FILE	REV
1 OF 1	1104150	D

B-375