NON-CONTROLLED COPY

INFORMATION SUBJECT TO CHANGE WITHOUT NOTICE

VERIFY REV LEVEL OF PAPER COPY WITH REV LEVEL ON PPC WEB SITE

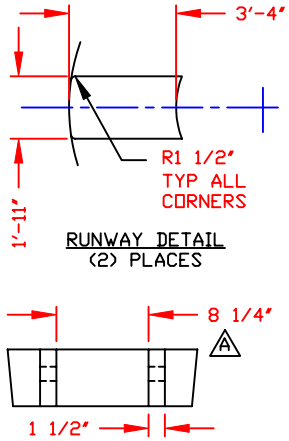

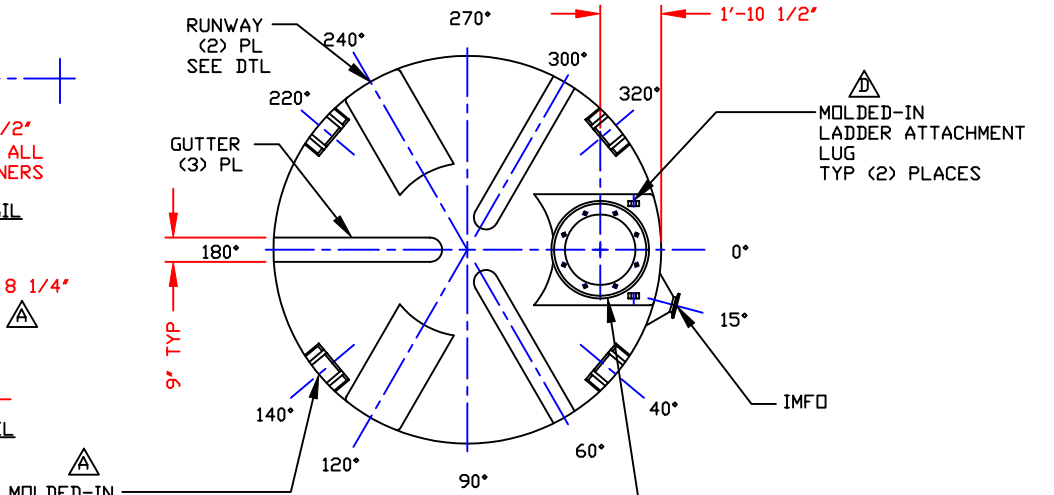

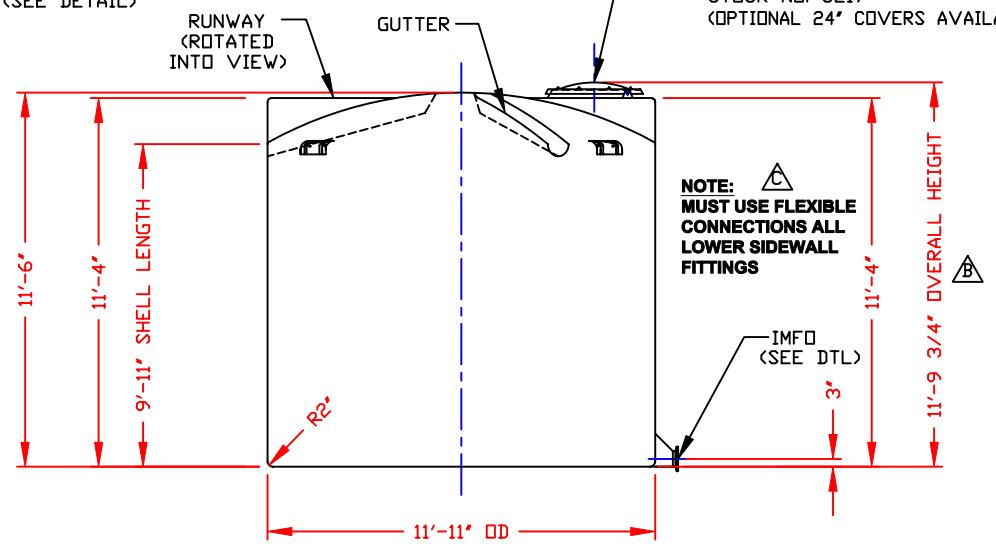

NOZZLE SCHEDULE & ACCESSORIES

SERVICE	MK	STOCK NO.	SIZE	FITTING	DEG	ELEV

IMFO AVAILABLE IN 4" PIPE SIZE ONLY

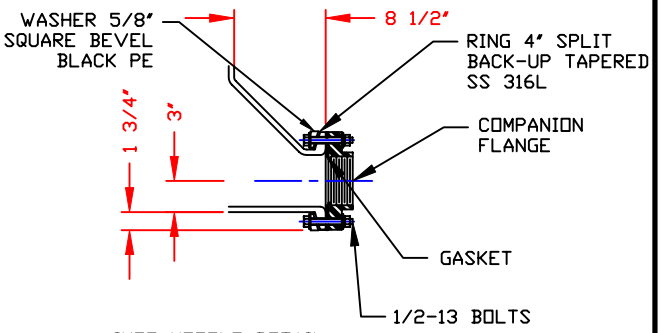

IMFO NOZZLE DETAIL
(INTEGRALLY MOLDED FLANGED OUTLET)
SCALE: NONE

NOTES:
1. THIS IS A COMPUTER GENERATED DWG. DO NOT REVISE BY HAND.
2. DIMENSIONS WILL VARY ±3% DUE TO VARIATIONS IN MULTIPLE MOLDS & CONDITIONS PREVALENT DURING MANUFACTURE & USAGE.
3. 5 1/2" WIDE MOLDED IN GALLONAGE MARKERS @ APPROX 22° UP TO 7200 GAL--AVOID WHEN PLACING FITTINGS.

CALCULATED CAPACITIES/ VOLUME IN U.S. GALLONS		
DESIGN CAP	DOME VOL	TOTAL VOL
8115	675	8790

CONFIDENTIAL PROPERTY OF POLY PROCESSING COMPANY NOT FOR REPRINT OR USE WITHOUT PERMISSION

DWG TITLE: 8100 GALLON IMFO TANK

SCALE: 1/4"=1'-0"

DATE: 11/11/99

POLY PROCESSING Company

Central Region
P.O. Box 4130 (71211)
2224 Old Downington Rd.
Monroe, LA 71203
(318) 343-7565
FAX (318) 343-8795

DR: MB WILKERSON

CK: D. RECTOR

SHEET: 1 OF 1

COMPUTER FILE: 1108100

REV: D

REV	
"D"	ADDED LADDER ATTACHMENT LUGS BY:JB 7/21/04 CK:WM
"C"	ADDED FITTING NOTE BY:MBW 3/3/03 CK:JB
"B"	ADDED DIMENSION BY:JB 10/21/02 CK:MBW
"A"	ADDED LIFTING LUGS & DETAIL BY:JB 7/12/02 CK:WM

B-25