NON-CONTROLLED COPY

INFORMATION SUBJECT TO CHANGE WITHOUT NOTICE

VERIFY REV LEVEL OF PAPER COPY WITH REV LEVEL ON PPC WEB SITE

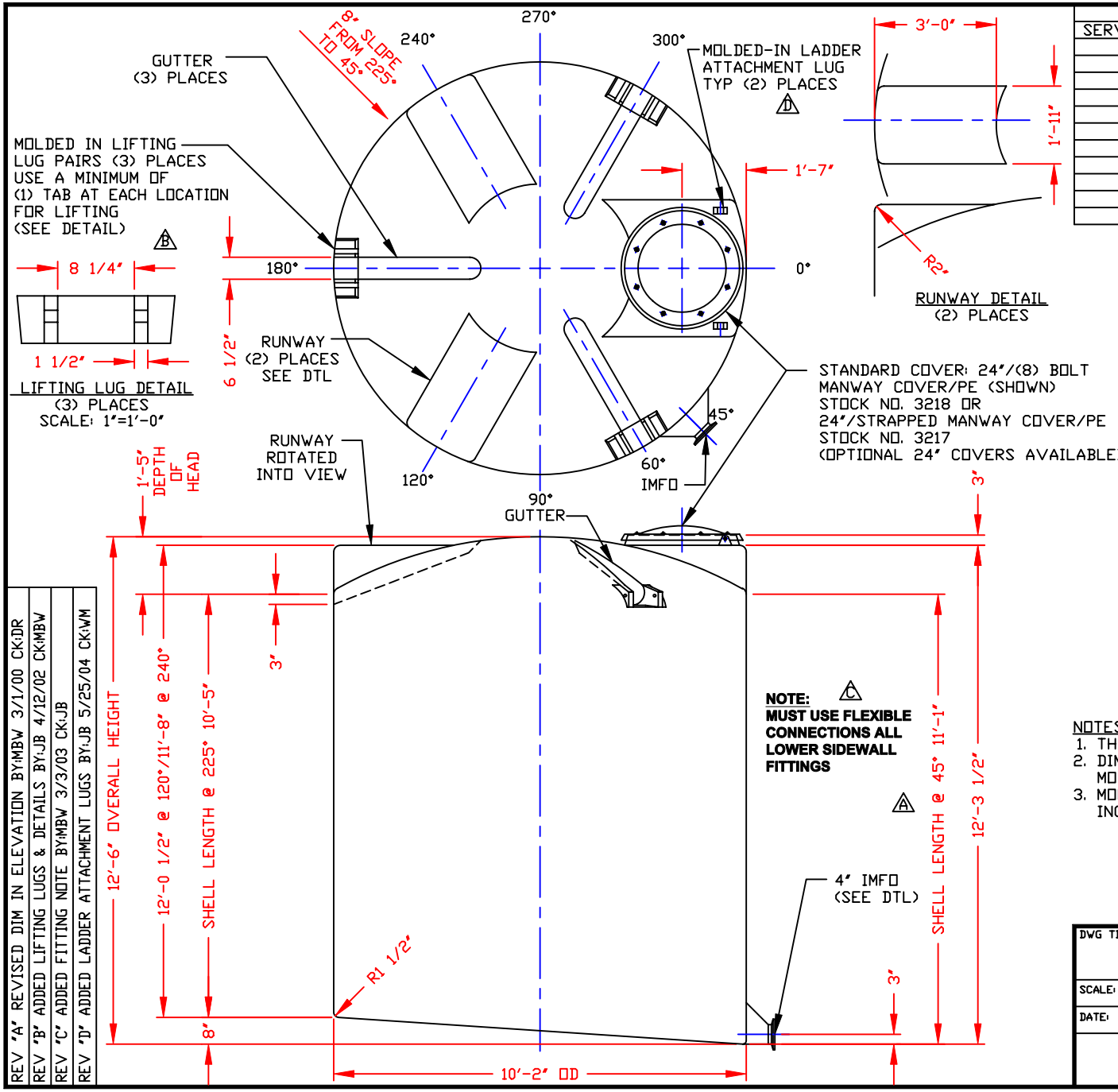

LIFTING LUG DETAIL
(3) PLACES
SCALE: 1"=1'-0"

RUNWAY DETAIL
(2) PLACES

NOZZLE SCHEDULE & ACCESSORIES

SERVICE	MK	STOCK NO.	SIZE	FITTING	DEG	ELEV

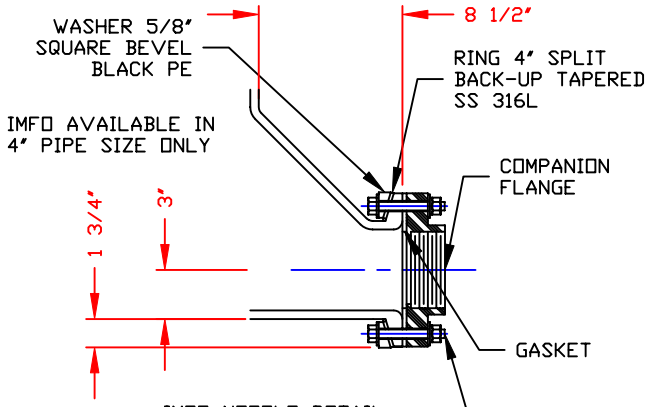

IMFO NOZZLE DETAIL
(INTEGRALLY MOLDED FLANGED OUTLET)
SCALE: NONE

NOTES

1. THIS IS A COMPUTER GENERATED DWG. DO NOT REVISE BY HAND.
2. DIMENSIONS WILL VARY ±3% DUE TO VARIATIONS IN MULTIPLE MOLDS & CONDITIONS PREVALENT DURING MANUFACTURE & USAGE.
3. MOLDED IN GALLONAGE MARKERS @ APPROX 60° IN 200 GALLON INCREMENTS UP TO 5800 GALLONS.

CALCULATED CAPACITIES/ VOLUME IN U.S. GALLONS		
DESIGN CAP	DOME VOL	TOTAL VOL
6388	419	6807

CONFIDENTIAL PROPERTY OF POLY PROCESSING COMPANY NOT FOR REPRINT OR USE WITHOUT PERMISSION

DWG TITLE: 6350 GALLON SLOPE BOTTOM IMFO TANK

SCALE: 3/8"=1'-0"

DATE: 11/15/99

POLY PROCESSING Company

Central Region
P.O. Box 4150 (71211)
2201 Old Sterlington Rd.
Monroe, LA 71203
(318) 343-7565
FAX (318) 343-8795

DR: MB WILKERSON

CK: D. RECTOR

SHEET	COMPUTER FILE	REV
1 OF 1	1206350	D

REV "A" REVISED DIM IN ELEVATION BY:MBW 3/1/00 CK:DR

REV "B" ADDED LIFTING LUGS & DETAILS BY:JB 4/12/02 CK:MBW

REV "C" ADDED FITTING NOTE BY:MBW 3/3/03 CK:JB

REV "D" ADDED LADDER ATTACHMENT LUGS BY:JB 5/25/04 CK:WM