NON-CONTROLLED COPY

INFORMATION SUBJECT TO CHANGE WITHOUT NOTICE

VERIFY REV LEVEL OF PAPER COPY WITH REV LEVEL ON PPC WEB SITE

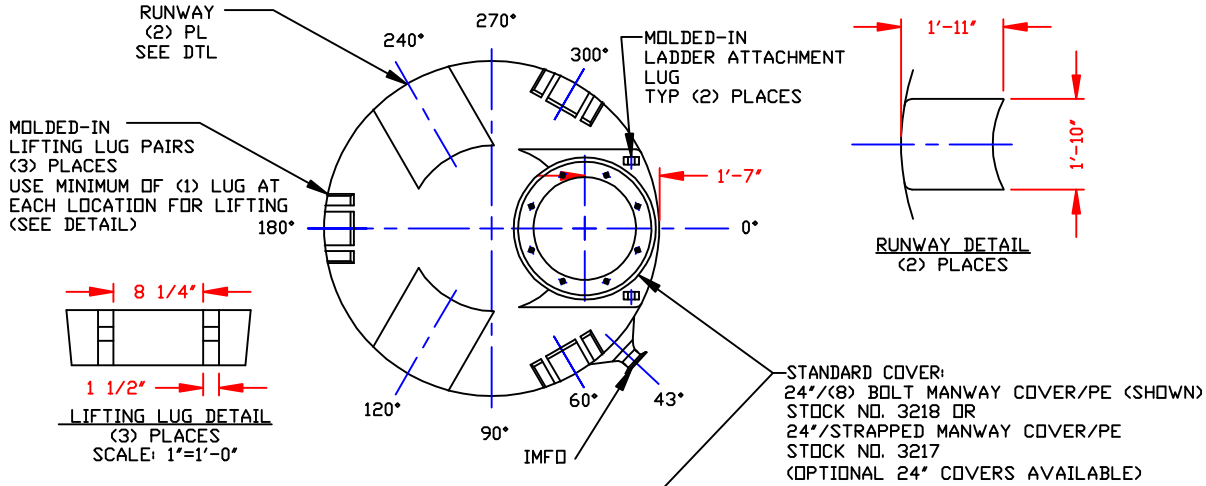

RUNWAY DETAIL
(2) PLACES

LIFTING LUG DETAIL
(3) PLACES
SCALE: 1"=1'-0"

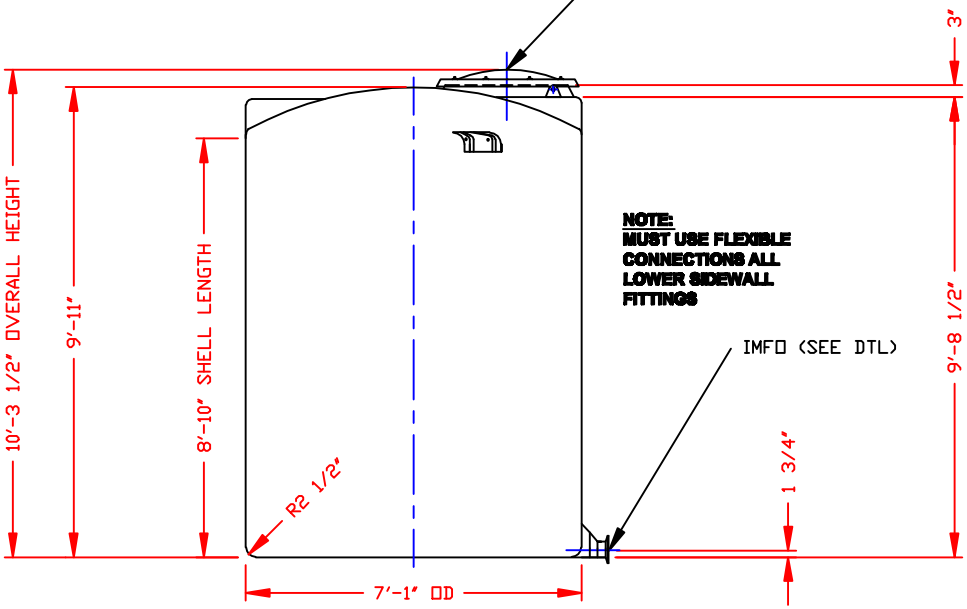

NOTE:
MUST USE FLEXIBLE CONNECTIONS ALL LOWER SIDEWALL FITTINGS

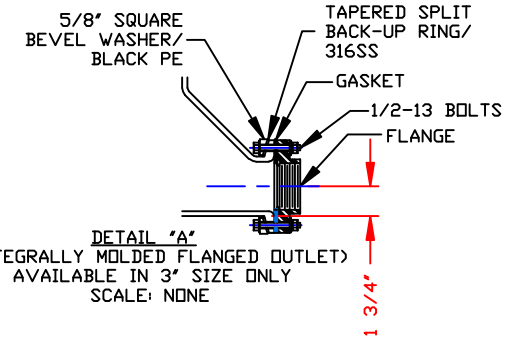

DETAIL "A"
(INTEGRALLY MOLDED FLANGED OUTLET)
AVAILABLE IN 3" SIZE ONLY
SCALE: NONE

NOZZLE SCHEDULE & ACCESSORIES

SERVICE	MK	STOCK NO.	SIZE	FITTING	DEG	ELEV

NOTES
1. THIS IS A COMPUTER GENERATED DWG. DO NOT REVISE BY HAND.
2. DIMENSIONS WILL VARY ±3% DUE TO VARIATIONS IN MULTIPLE MOLDS & CONDITIONS PREVALENT DURING MANUFACTURE & USAGE.
3. MOLDED IN GALLONAGE MARKERS @ APPROX 60° IN 200 GAL INCREMENTS UP TO 2200 GAL.
   GALLONAGE MARKERS ARE 5" WIDE AND MUST BE AVOIDED WHEN PLACING FITTINGS.

CALCULATED CAPACITIES/
VOLUME IN U.S. GALLONS

DESIGN CAP	DOME VOL	TOTAL VOL
2559	142	2701

CONFIDENTIAL PROPERTY OF POLY PROCESSING COMPANY NOT FOR REPRINT OR USE WITHOUT PERMISSION

DWG TITLE: 2550 GALLON IMFO TANK (VA)

SCALE: 3/8"=1'-0"

DATE: 8/11/09

POLYPROCESSING COMPANY LLC

Central Region
P.O. Box 4150 (71211)
2224 Old Sterlington Rd.
Monroe, LA 71203
(318) 343-7565
FAX (318) 343-8795

DR: J. BRANTLEY

CK: W. MANUEL

SHEET	COMPUTER FILE	REV
1 OF 1	1102550V	-

B-375