NON-CONTROLLED COPY	COPY ISSUED BY_____.
INFORMATION SUBJECT TO CHANGE WITHOUT NOTICE	
COPY WILL NOT BE UPDATED	COPY ISSUED ON_____.

NOZZLE SCHEDULE & ACCESSORIES

SERVICE	MK	STOCK NO.	SIZE	FITTING	DEG	ELEV

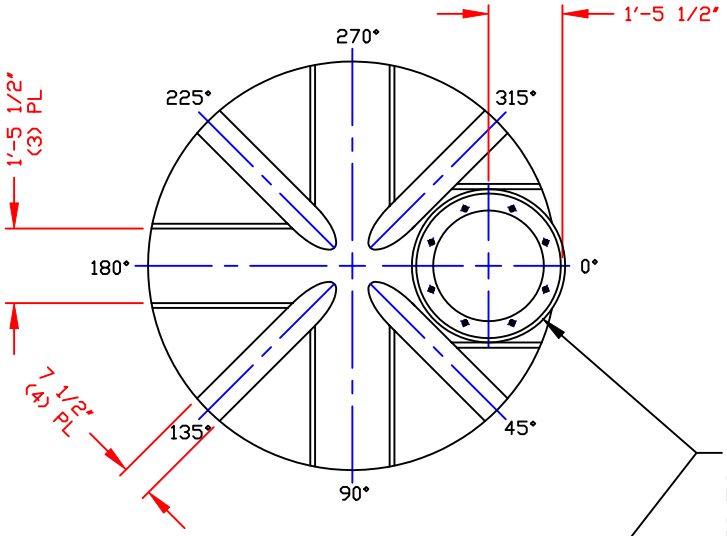

STANDARD COVER:
24"/(8) BOLT MANWAY COVER/PE (SHOWN)
PPC STOCK NO. 3218 OR
24"/STRAPPED MANWAY COVER/PE
PPC STOCK NO. 3217
(OPTIONAL 24" COVERS AVAILABLE)

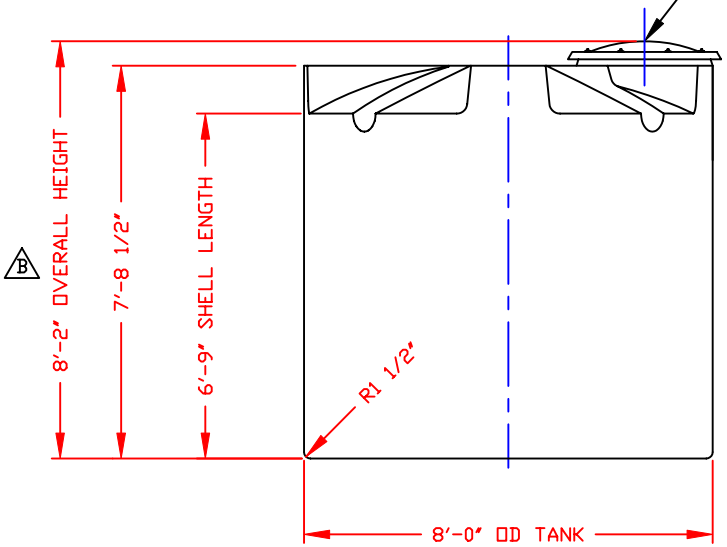

NOTE: C
MUST USE FLEXIBLE CONNECTIONS ALL LOWER SIDEWALL FITTINGS

NOTES
1. THIS IS A COMPUTER GENERATED DWG. DO NOT REVISE BY HAND.
2. DIMENSIONS WILL VARY ±3% DUE TO VARIATIONS IN MULTIPLE MOLDS & CONDITIONS PREVALENT DURING MANUFACTURE & USAGE.
3. NO GALLONAGE MARKERS THIS TANK.

CALCULATED CAPACITIES/ VOLUME IN U.S. GALLONS		
DESIGN CAP	DOME VOL	TOTAL VOL
2504	136	2640

CONFIDENTIAL PROPERTY OF POLY PROCESSING COMPANY NOT FOR REPRINT OR USE WITHOUT PERMISSION

DWG TITLE: 2500 GALLON UPRIGHT TANK

SCALE: 3/8"=1'-0"
DATE: 3/1/00

POLY PROCESSING Company
Western Region
P.O. Box 80
8055 South Ash Street
French Camp, CA 95231
(209) 982-4904
FAX (209) 982-0455

DR: MB WILKERSON
CK: D. RECTOR

SHEET	COMPUTER FILE	REV
1 OF 1	11002500	C

REV "C" ADDED FITTING NOTE BY:JB 3/19/03 CK:MBW
REV "B" ADDED DIMENSION DR:JB 10/18/02 CK:MBW
REV "A" REVISED TO REFLECT MOLD MODIFICATION DR:MBW 9/21/00 CK:JB

B-375