NON-CONTROLLED COPY

INFORMATION SUBJECT TO CHANGE WITHOUT NOTICE

VERIFY REV LEVEL OF PAPER COPY WITH REV LEVEL ON PPC WEB SITE

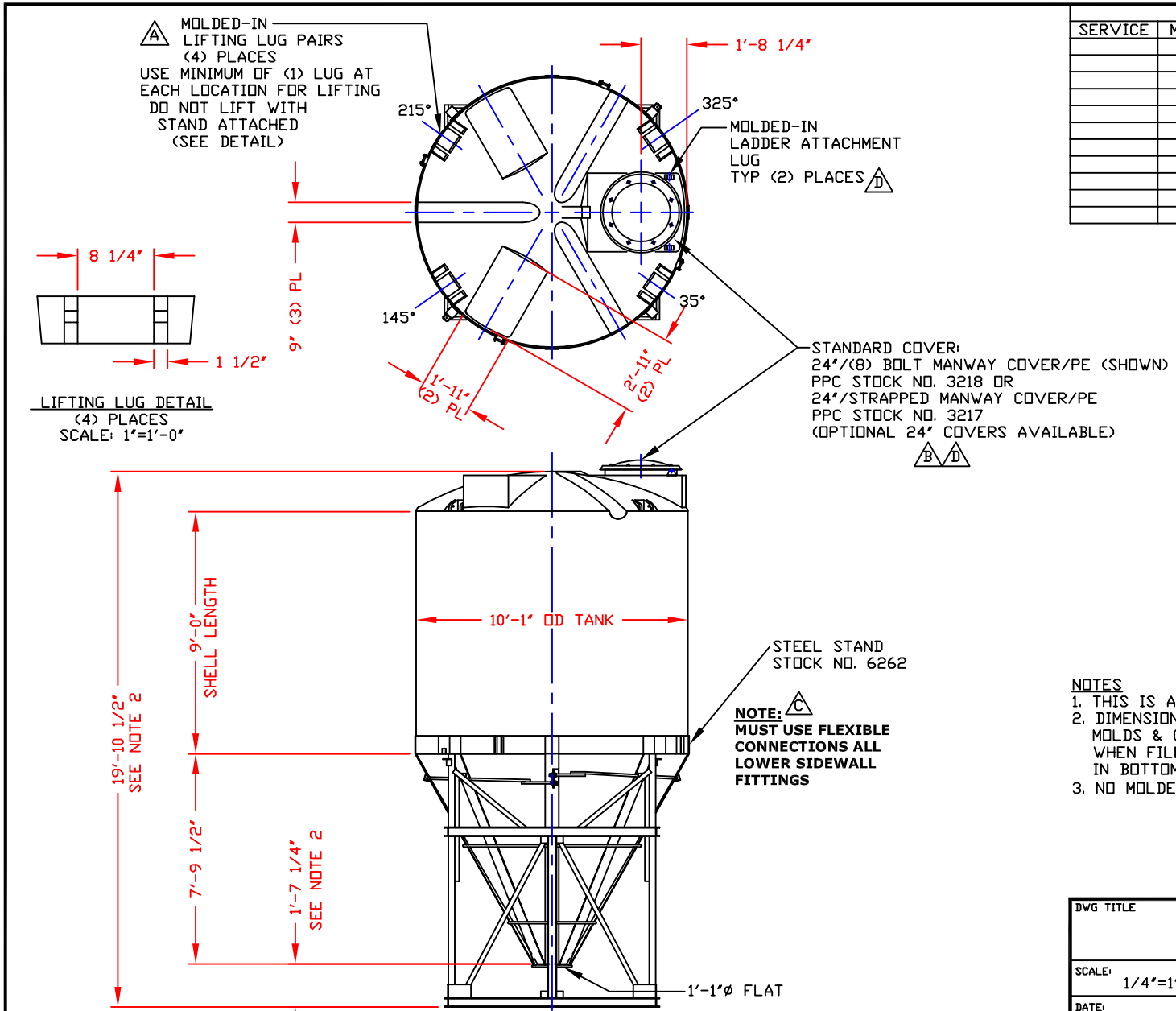

NOZZLE SCHEDULE & ACCESSORIES

SERVICE	MK	STOCK NO.	SIZE	FITTING	DEG	ELEV

NOTES

1. THIS IS A COMPUTER GENERATED DWG. DO NOT REVISE BY HAND.
2. DIMENSIONS WILL VARY ±3% DUE TO VARIATIONS IN MULTIPLE MOLDS & CONDITIONS PREVALENT DURING MANUFACTURE & USAGE. WHEN FILLED, TANK MAY SETTLE IN STAND CAUSING VARIATIONS IN BOTTOM CLEARANCE & OVERALL HEIGHT DIMENIONS.
3. NO MOLDED IN GALLONAGE MARKERS THIS TANK.

CALCULATED CAPACITIES/ VOLUME IN U.S. GALLONS

DESIGN CAP	DOME VOL	TOTAL VOL
6856	480	7336

CONFIDENTIAL PROPERTY OF POLY PROCESSING COMPANY NOT FOR REPRINT OR USE WITHOUT PERMISSION

DWG TITLE: 6850 GALLON 60° CONE BOTTOM TANK W/STEEL STAND

SCALE: 1/4"=1'-0"

DATE: 5/10/00

POLY PROCESSING COMPANY
Western Region
P.O. Box 80
8055 South Ash Street
French Camp, CA 95231
(209) 982-4904
FAX (209) 982-0455

DR: MB WILKERSON

CK: D. RECTOR

SHEET	COMPUTER FILE	REV
1 OF 1	14006850S	D

REV "D" ADDED LADDER ATTCHMENT LUGS/REVISED COVER BY:JB 10/13/08 CK:WM
REV "C" ADDED FITTING NOTE BY:JB 8/21/03 CK:WM
REV "B" REVISED STOCK NUMBER BY:JB 8/21/03 CK:WM
REV "A" ADDED LIFTTING LUGS & DETAIL BY:JB 8/21/03 CK:WM

B-25