| NON-CONTROLLED COPY | COPY ISSUED BY_____. |
|---|---|
| INFORMATION SUBJECT TO CHANGE WITHOUT NOTICE | |
| COPY WILL NOT BE UPDATED | COPY ISSUED ON_____. |

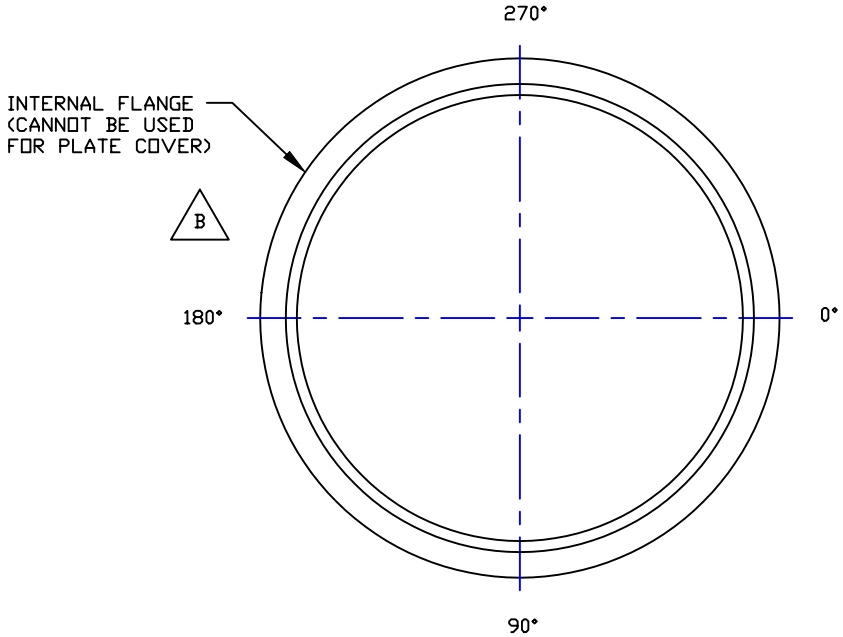


NOZZLE SCHEDULE & ACCESSORIES

| SERVICE | MK | STOCK NO. | SIZE | FITTING | DEG | ELEV |
|---|---|---|---|---|---|---|
| | | | | | | |
| | | | | | | |
| | | | | | | |
| | | | | | | |
| | | | | | | |
| | | | | | | |
| | | | | | | |
| | | | | | | |
| | | | | | | |
| | | | | | | |
| | | | | | | |

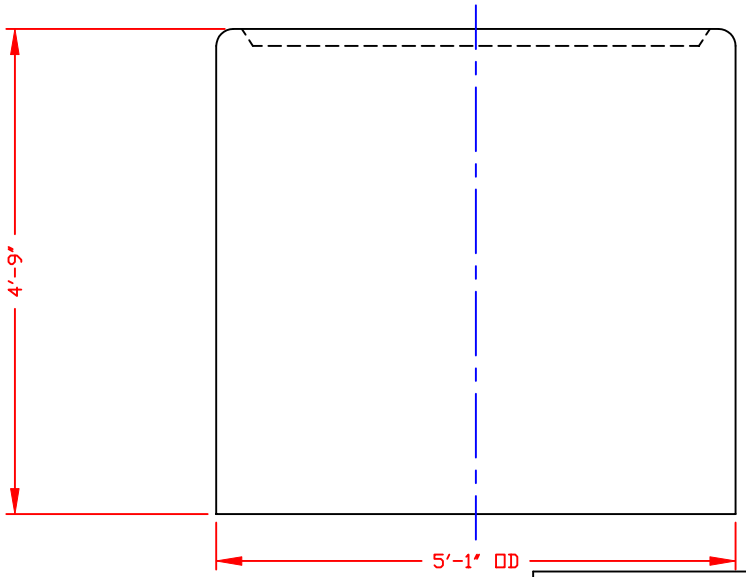


A

**NOTE:**
**MUST USE FLEXIBLE CONNECTIONS ALL LOWER SIDEWALL FITTINGS**

NOTE:
1. THIS IS A COMPUTER GENERATED DWG. DO NOT REVISE BY HAND.
2. DIMENSIONS WILL VARY ±3% DUE TO VARIATIONS IN MULTIPLE MOLDS & CONDITIONS PREVALENT DURING MANUFACTURE & USAGE.
3. MOLDED IN GALLONAGE MARKERS IN 100 GAL INCREMENTS UP TO 700 GALLONS.

| CALCULATED CAPACITIES/ VOLUME IN U.S. GALLONS |
|---|
| DESIGN CAPACITY |
| 700 |

CONFIDENTIAL PROPERTY OF POLY PROCESSING COMPANY NOT FOR REPRINT OR USE WITHOUT PERMISSION

DWG TITLE: 700 GALLON OPEN TOP TANK

SCALE: 3/4"=1'-0"
DATE: 12/27/99

POLY PROCESSING Company
Central Region
P.O. Box 4150 (71211)
2201 Old Sterlington Rd.
Monroe, LA 71203
(318) 343-7563
FAX (318) 343-8795

DR: MB WILKERSON
CK: J. BRANTLEY

SHEET: 1 OF 1
COMPUTER FILE: 1500700
REV: B

REV "B" CORRECTED FLANGE STYLE BY:MBW 7/14/04 CK:JB
REV "A" ADDED FITTING NOTE BY:MBW 4/14/03 CK:JB

B-75